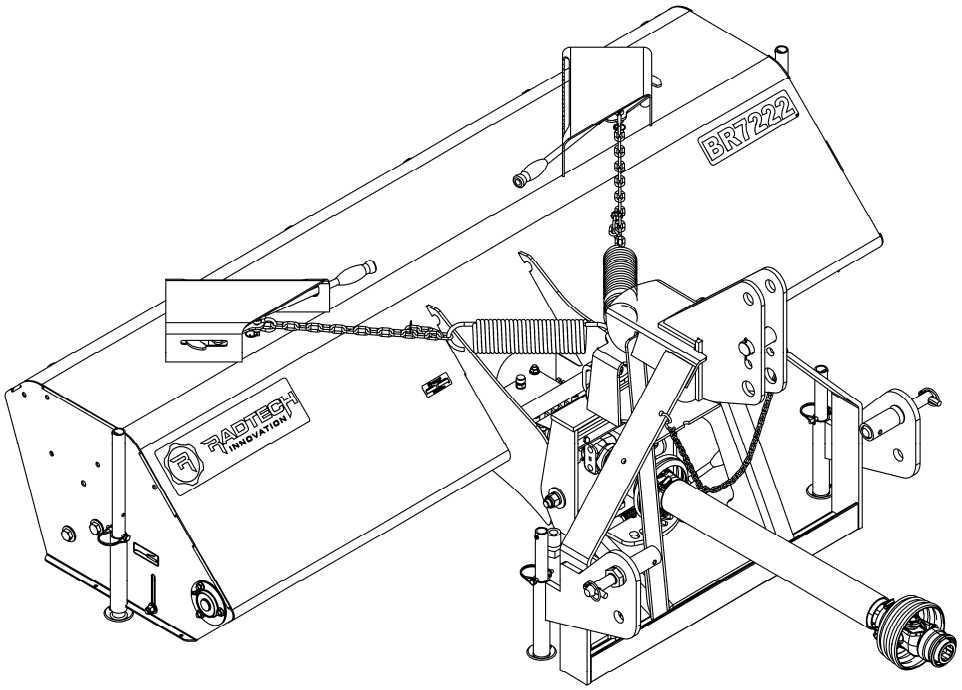

OPERATOR'S AND PARTS MANUAL

ROTARY BROOMS
MODELS BR6022 AND BR7222

SERIAL NO. BKT09862 AND UP

OM 0376BR-A
02/13

TABLE OF CONTENT

INTRODUCTION – TO THE PURCHASER 3

SAFETY PRECAUTIONS 4

Before Operation 4

Notice 5

Subframe & Rotary Broom 5

Before Operation 5

Rotary Broom & Subframe Operation 6

Maintenance 8

DECALS 9

ASSEMBLY 10

Rotary Broom Assembly 10

Preparation 10

Attaching the Broom to the Tractor 10

Installation with a 3Point Hitch Cat. 1 & 2 11

Installation with a Quick Hitch 12

Installation of the Driveline 13

Removing the Broom from the Tractor 15

OPERATION 16

Broom Operation 16

Preparing to Sweep 16

Raising and Lowering the Broom 16

Manual Angling 16

Transport Mode 16

Ground Pressure Adjustment 17

Adjustment of the Tension Springs 18

General Sweeping 19

Lawn Dethatching & Leaf Raking 20

Snow Removal 20

Troubleshooting 21

TABLE OF CONTENT

MAINTENANCE 21
Maintenance 21
Hardware 21
Brush Replacement 22
Adjustment of the Drive Chain 24
Gearbox Oil Level and Oil Change 24
Lubrication 25
Storage 26
PARTS 27
Introduction 27
Rotary Broom Assembly – BR6022 & BR7222 28
Rotary Broom - Exploded view – BR6022 & BR7222 30
Female Hitch and Pivot Assembly 32
Support and Brush Assembly 34
Female Driveline - 4700162 35
Gearbox - 4500076 36
AVAILABLE OPTIONS 37
TORQUE SPECIFICATION TABLE 38

INTRODUCTION

TO THE PURCHASER

All products are designed to give safe, dependable service if they are operated and maintained according to instructions. **Read and understand this manual before operation.**

This manual has been prepared to assist the owner and operators in the safe operation and suitable maintenance of the rotary broom. The information is applicable to products at the time of manufacture and does not include modifications made afterwards.

Read and understand this operator's manual before attempting to put equipment into service. Familiarize yourself with the operating instructions and all the safety recommendations contained in this manual and those labeled on the equipment and on the tractor. Follow the safety recommendations and make sure that those with whom you work follow them.

Illustrations

The illustrations may not necessarily reproduce the full detail and the exact shape of the parts or depict the actual models, but are intended for reference only.

Direction Reference

All references to right and left, forward or rearward, are from the operator's seat, facing the steering wheel.

To assist your dealer in handling your needs, please record hereafter the model number and serial number of your rotary broom and tractor. It is also advisable to supply them to your insurance company. It will be helpful in the event that rotary broom or tractor is lost or stolen.

	TRACTOR	**ROTARY BROOM**
MODEL:		
SERIAL NUMBER:		
DATE OF PURCHASE:		
DEALER NAME:		

SAFETY PRECAUTIONS

SAFETY FIRST

This symbol, the industry's "Safety Alert Symbol", is used throughout this manual and on labels on the machine itself to warn of the possibility of personal injury. Read these instructions carefully. It is essential that you read the instructions and safety regulations before you attempt to assemble or use this rotary broom.

DANGER : Indicates an immediate hazardous situation which, if not avoided, will result in death or serious injury.

WARNING : Indicates a potentially hazardous situation which, if not avoided, could result in death or serious injury.

CAUTION : Indicates a potentially hazardous situation which, if not avoided, may result in minor or moderate injury.

IMPORTANT : Indicates that rotary broom or property damage could result if instructions are not followed.

NOTE : Gives helpful information.

All products are designed to give safe, dependable service if they are operated and maintained according to instructions. **Read and understand this manual before operation**. It is the owner's responsibility to be certain anyone operating this product reads this manual, and all other applicable manuals, to become familiar with this rotary broom and all safety precautions. Failure to do so could result in serious personal injury or rotary broom damage. If you have any questions, consult your dealer.

BEFORE OPERATION

Children

Tragic accidents can occur if the operator is not alert to the presence of children. Children are generally attracted to machines and the work being done. Never assume children will remain where you last saw them.

1. Keep children out of the operating area and under the watchful eye of another responsible adult.
2. Be alert and turn machine off if children enter the work area.
3. Before and when backing, look behind for small children.
4. Never carry children while operating the machine. They may fall off and be seriously injured or interfere with the safe operation of the machine.
5. Never allow children to play on the machine or rotary broom even when they are turned off.
6. Never allow children to operate the machine even under adult supervision.
7. Use extra care when approaching blind corners, shrubs, trees, or other obstructions that might hide children from sight.

NOTICE

A safe operator is the best assurance against accidents. All operators, no matter how experienced they may be, should read this operator's manual and all other related manuals before attempting to operate the rotary broom. Please read the following section and pay particular attention to all safety recommendations contained in this manual and those labeled on the rotary broom and on the tractor.

SUBFRAME & ROTARY BROOM

Before Operation

1. Read and understand both the tractor and the rotary broom operator's manual before using the rotary broom. Know how to operate all controls and how to stop the unit and disengage the controls quickly. Lack of knowledge can lead to accidents.
2. Never wear loose, torn, or bulky clothing around the tractor, the subframe and the rotary broom. It may catch on moving parts or controls, causing injury.
3. Before and during seasons, thoroughly inspect the area where the rotary broom is to be used and remove all objects that may be thrown or cause damage to the rotary broom.
4. Do not operate rotary broom in wintertime without wearing adequate winter garments. Always wear protective clothing.
5. Never attempt to make any adjustments while engine is running. Read this manual carefully to acquaint yourself with the rotary broom as well as the tractor operator's manual. Working with unfamiliar rotary broom can lead to accidents. Be thoroughly familiar with the controls and proper use of the rotary broom.
6. Keep all safety guards in place and verify hardware for proper tightening.
7. Check for moving parts excessive wear regularly. Replace worn parts with genuine parts.
8. Replace all missing, illegible, or damaged safety and warning decals. See list of decals in operator's manual.
9. Do not modify or alter this rotary broom or any of its components or any rotary broom function without first consulting your dealer.
10. Keep safety decals clean of dirt and grime.
11. Make sure the tractor is counterweighted as recommended by your dealer. Weights provide the necessary balance to improve stability, traction and steering.

Rotary Broom & Subframe Operation

1. Before leaving the tractor unattended, take all possible precautions. Park the tractor/rotary broom on level ground, place the transmission in neutral, set the parking brake, disengage the PTO, lower the rotary broom to the ground, place all levers including auxiliary control levers in neutral, shut off the engine and remove the ignition key.
2. Before starting the tractor/ rotary broom, inspect and clean every rotating part.
3. Prior to operation, clear work area of all objects that can be picked up and thrown. Mark all curbs, pipes, etc. that cannot be moved.
4. Be sure the PTO switch/lever is in OFF position before starting engine.
5. Exercise extreme caution when operating on or crossing a gravel drive, walks, or roads. Stay alert for hidden hazards or traffic.
6. Do not carry passengers.
7. Keep clear of all rotating parts. Do not put hands or feet under, or into rotary broom and subframe with engine running. Be especially observant of the rotary broom areas of discharge, intake or all other mechanical motions.
8. Park the tractor/rotary broom on level ground, place the transmission in neutral, set the parking brake, disengage the PTO, lower the rotary broom to the ground, place all control levers in neutral, shut off the engine, remove the ignition key and allow the rotating parts to stop BEFORE making any repairs, adjustments or inspections.
9. If the rotary broom starts to vibrate abnormally, disengage the PTO, stop the engine immediately and check for cause. Excessive vibration is generally a sign of trouble.
10. Do not run the engine indoors except when starting engine and transporting attachment in or out of building. Carbon monoxide gas is colorless, odorless and deadly.
11. Never operate rotary broom without guards, and other safety protective devices in place. All tractor and rotary broom shields and covers must be correctly installed at all times. When necessary to remove these, they must be reinstalled immediately.
12. Never operate rotary broom near glass enclosures, automobiles, window wells, embankments, etc., without proper adjustment of snow discharge angle.
13. Never operate rotary broom at high transport speeds on a slippery surface.
14. Use extra caution when backing up.
15. Disengage power to rotary broom when transporting or when not in use.
16. Never operate the rotary broom without good visibility and lighting.
17. Prolonged exposure to loud noise can cause impairment or loss of hearing. Wear a suitable hearing protective device such as earmuffs or earplugs to protect against objectionable or uncomfortable noises.
18. Never allow anyone near the work area.
19. Securely connect rotary broom drive shaft. Check that all tractor and rotary broom drivelines are in good working order. Rotary broom drive shaft coupler must securely lock to and be retained by annular groove on tractor drive shaft.

20. Never allow anyone to operate the rotary broom until they have read the manual completely and are thoroughly familiar with basic tractor and rotary broom operation.

21. Make sure the tractor is counterweighted as recommended by your dealer. Weights provide the necessary balance to improve stability, traction and steering.

22. Always make sure all rotary broom components are properly installed and securely fastened BEFORE operation.

23. Make sure nobody is in the working area of the rotary broom. The debris that can be thrown could cause serious personal injuries.

24. Do not allow passengers on the tractor/rotary broom at any time. There is no safe place for passengers on this rotary broom. The operator MUST sit in the tractor seat.

25. Eye and hearing protection is recommended when operating the rotary broom.

26. Inspect the rotary broom after striking any foreign object to assure that all rotary broom parts are safe and secure and not damaged.

27. Be especially observant of the operating area and terrain. Watch for holes, rocks, or other hidden hazards. ALWAYS inspect the area prior to operating rotary broom.

28. DO NOT operate rotary broom near the edge of drop-offs or banks.

29. DO NOT operate rotary broom on steep slopes as overturn may result.

30. Operate up and down (not across) intermediate slopes. Avoid sudden starts and stops.

31. Drive tractor backwards up steeper slopes with rotary broom off. Then operate as you travel down the slope.

32. Slow down before you change directions on any slope.

33. Make sure the tractor is counterweighted as recommended by your dealer. Weights provide the necessary balance to improve stability, traction and steering.

34. Never stand alongside of the rotary broom while the engine is running.

35. Always disengage rotary broom drive prior to transporting unit.

MAINTENANCE

ALWAYS USE GENUINE PARTS WHEN REPLACEMENT PARTS ARE REQUIRED

1. Keep the tractor and rotary broom properly maintained.
2. Park the tractor/rotary broom on level ground, place the transmission in neutral, set the parking brake, disengage the PTO, lower the rotary broom to the ground, place all control levers in neutral, shut off the engine and remove the ignition key and allow the rotating parts to stop BEFORE making any rotary broom adjustments.
3. To avoid injury, do not adjust, unblock the driving system, or service the rotary broom with the tractor engine running. Make sure rotating components have completely stopped before leaving the operator's seat.
4. Keep the tractor/rotary broom clean. Snow , dirt or ice build-up can lead to malfunction or personal injury from thawing and refreezing in garage.
5. Always wear eye protection when cleaning or servicing the rotary broom or subframe.
6. DO NOT service the tractor while the engine is running or hot, or if the unit is in motion. Always lower rotary broom to the ground. If necessary to service rotary broom in raised position, securely support with stands or suitable blocking before working underneath. Do not rely on hydraulically supported devices for your safety. They can settle suddenly, leak down, or be accidentally lowered.
7. Do not attempt to service machine, clear obstructions or unclog the rotary broom's driving system with the engine running. Always shut off engine and allow all motion to cease.
8. The manufacturer will not claim responsibility for fitment of unapproved parts and/or accessories and any damages as a result of their use.
9. Make sure all shields and guards are securely in place following all service, cleaning, or repair work.
10. Do not modify or alter this rotary broom or any of its components or operating functions. If you have questions concerning modifications, consult with your dealer.
11. Do not operate a rotary broom that is defective or has missing parts. Make sure that all recommended maintenance procedures are completed before operating the rotary broom.
12. Check all controls regularly and adjust where necessary. Make sure that the brakes are evenly adjusted.
13. Periodically check all nuts and bolts for tightness, especially wheel hub and rim nuts.
14. To avoid serious personal injury: Escaping hydraulic/diesel fluid under pressure can penetrate the skin causing serious injury. Do not use your hands to check for leaks. Use a piece of cardboard or paper to search for leaks.
15. Stop engine and relieve pressure before connecting or disconnecting hydraulic hoses. Tighten all connections before starting engine or pressurizing hoses.

DECALS

Replace immediately if damaged

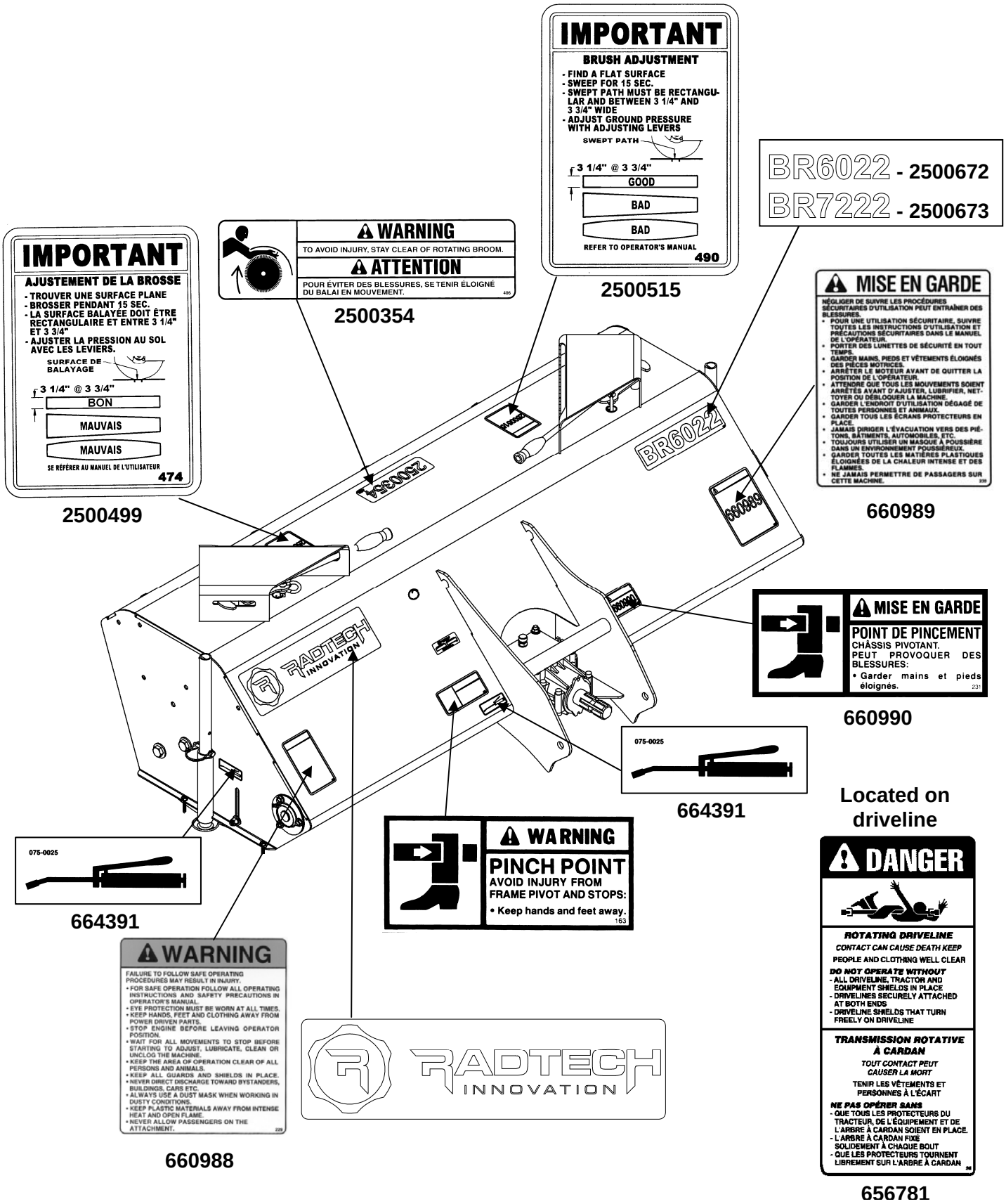

ROTARY BROOM ASSEMBLY

The rotary broom is pre assembled at the factory, however, parts contained in the bag and box must be installed. Use the present manual and lay out all parts for assembly. Separate bolts and nuts into various sizes. After assembly, torque all the bolts according to the Torque Specification Table enclosed at the end of the manual.

.

Preparation
(Figure 1)

After removing the rotary broom from the wooden crate, set it on the its parking stands by removing the 1/4" wire lock pin (item 1) and lowering the parking stand (item 2). Insert the 1/4" wire lock pin (item 1) on the parking stand (item 2) as shown. Repeat the same procedure for the other parking stands.

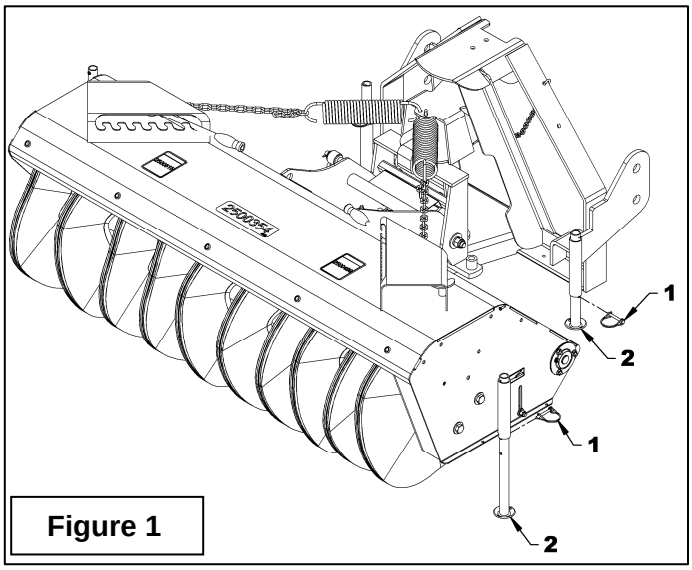

Figure 1

Attaching the Broom to the Tractor
(Figure 2)

1. Attach the upper support for 3 point hitch (item1) to the 3 point hitch (item2) with two 1/2"NC x 1 1/4" lg. hex. bolts (item3) and serrated flange nuts (item 4).

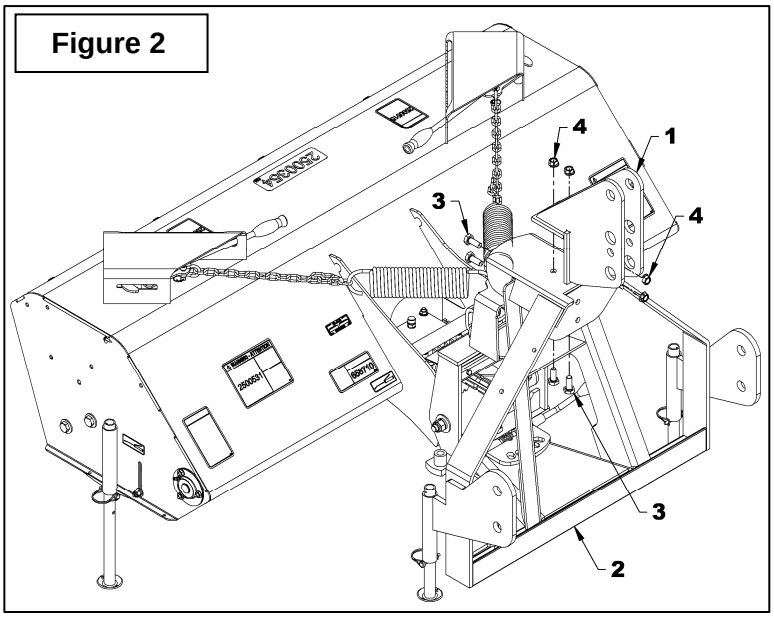

Figure 2

Installation with a 3Point Hitch Cat. 1 & 2

(Figures 3a-3b)

1. Choose the figure corresponding to the hitch category used and attach the broom to the tractor 3 point hitch using the attaching points shown by the arrows.

2. Install the cat. 2 section of the pin towards the outside of the broom and install the 7/16" linchpins.

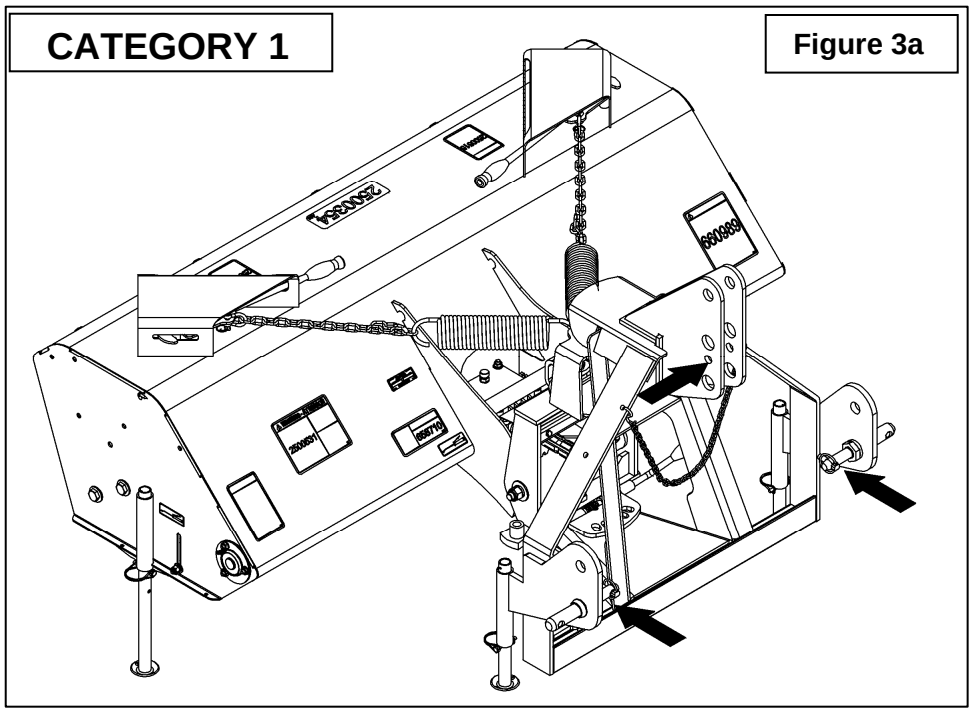

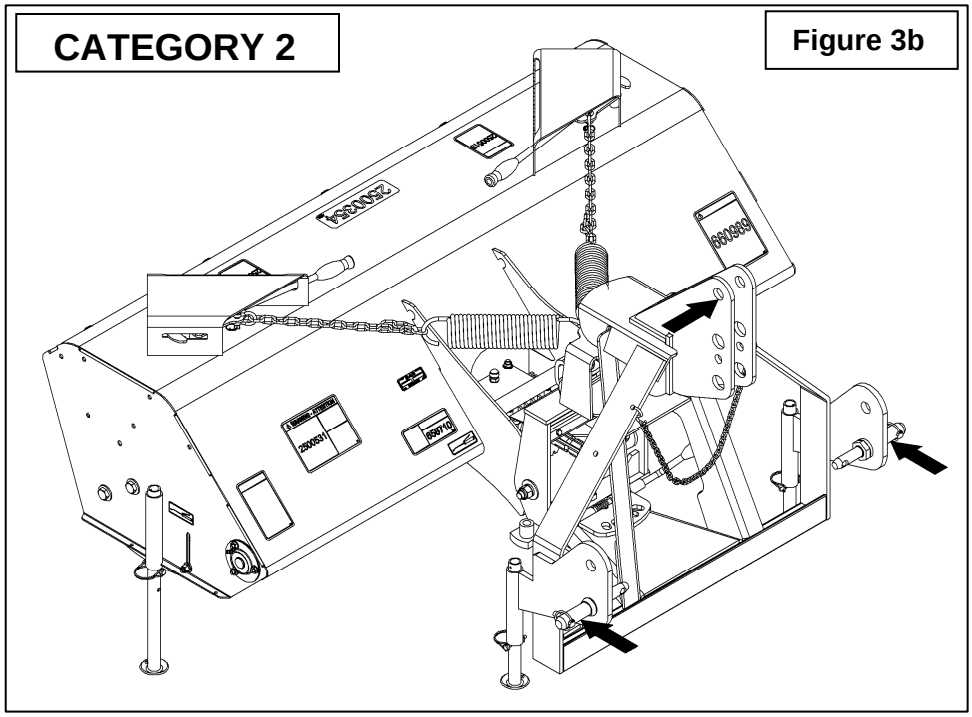

Installation with a Quick Hitch
(Figures 4a-4b-4c)

1. **Figure 4a:** Install a bushing (item 1) on each pin (item 2) and secure in place with the spring pins (item 3).
2. **Figures 4a-4b:** Install the Ø1 1/4" (item 1) pin on the upper support and secure with two Ø 1/8" x 1 3/4" cotter pins (item 2). Install a pin (item 3) in each plate of the hitch (item 4) from the inside for cat. 1 and from the outside for cat. 2 as shown.

   NOTE: The 7/16" linchpins are not required with a quick hitch.

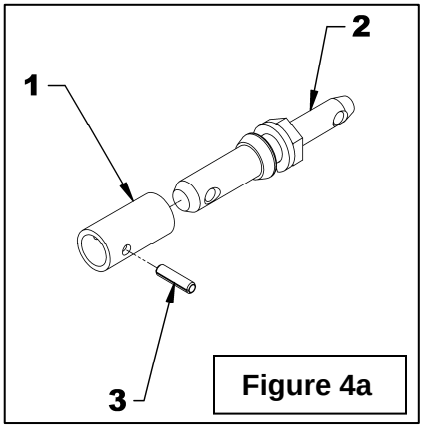

Figure 4a

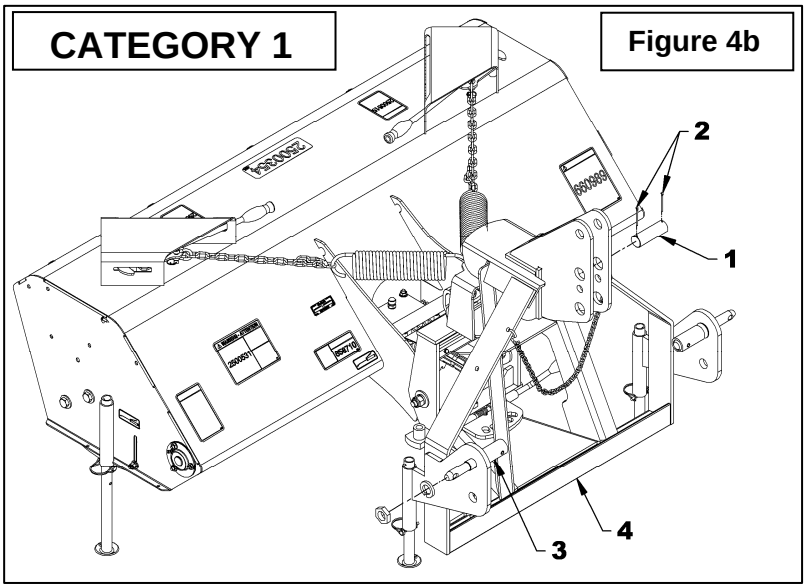

Figure 4b

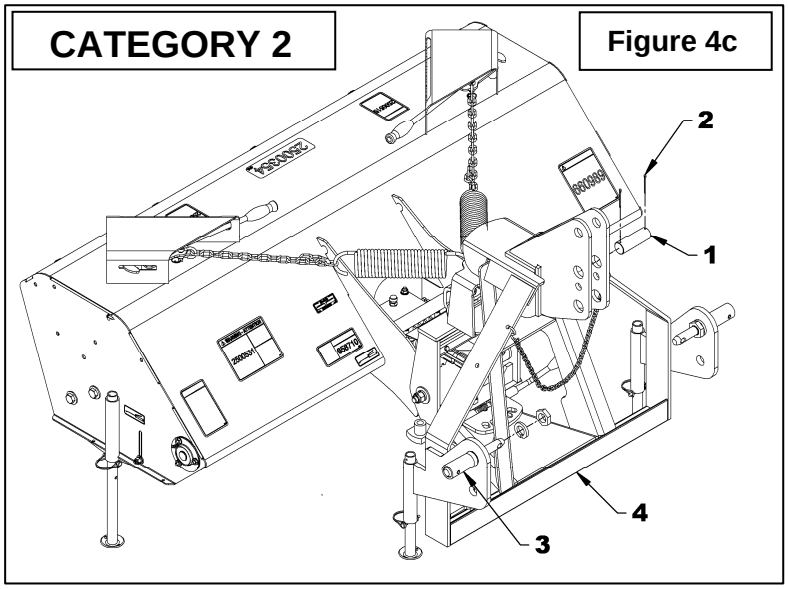

Figure 4c

Installation of the Driveline

(Figures 5a-5b-5c-5d)

1. **Figure 5a:** After the broom is installed on the tractor, lift the broom and raise the parking stands (item 1) as shown and remove the draw bar (item 2).

2. **Figure 5b:** Lower the broom to the ground and using the adjustable idler (item 1) set the hitch so that the bottom of the hitch is at 3 1/4" from the ground when at a 90° angle.

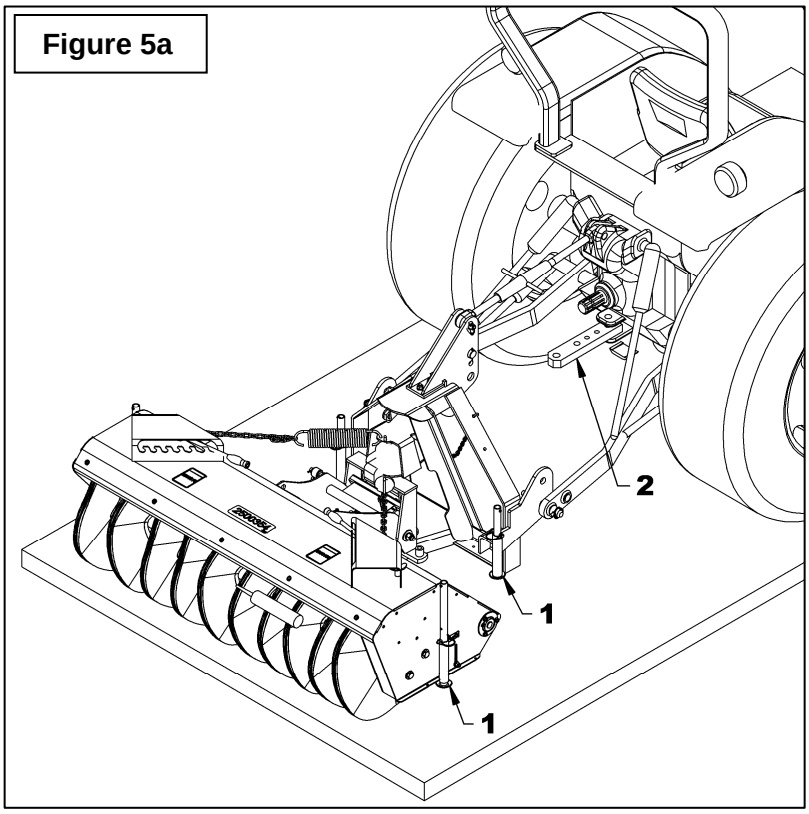

Figure 5a

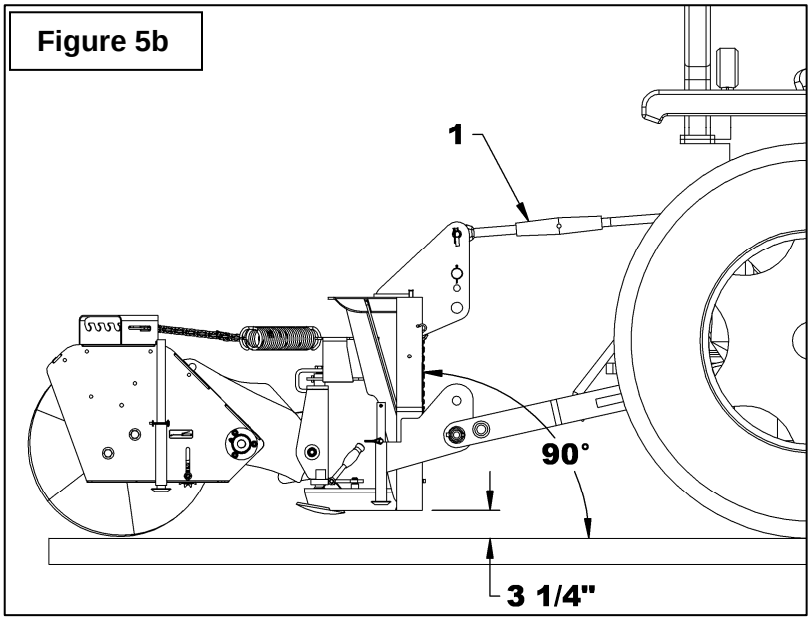

Figure 5b

IMPORTANT: Before using the broom, make sure the driveline is not to long. In the working position, the two half drivelines must overlap enough to ensure maximum efficiency without any interference.

3. **Figure 5c:** Determine the "X" length by measuring the distance between the tractor's driveshaft and the end of the broom's driven shaft when the broom is fully raised.
4. **Figure 5c:** Place the two half drivelines side by side and position them to obtain the "X" length plus 3 3/4" between the two ends of the half drivelines. Mark each half driveline at the same distance of the end of the opposite guard bell and cut the sections as illustrated.
5. **Figure 5c:** Cut the plastic guard of the male half driveline 7" from the end of the shaft. **Cut only the plastic guard**.
6. Detach the side chain and wrap it around the flat bar of the hitch then secure it in one of the links so it doesn't come into interference with the driveline (not illustrated).
7. **Figure 5d:** Connect the male half driveline to the broom and secure with two 1/2" NC X 3" bolts (item 1) and two 1/2" NC nylon insert nuts (item 2). Connect the female half driveline to the tractor keeping both half drivelines connected.

IMPORTANT: Raise the broom slowly making sure the two half drivelines do not go into one and other and that there is no possible interference.

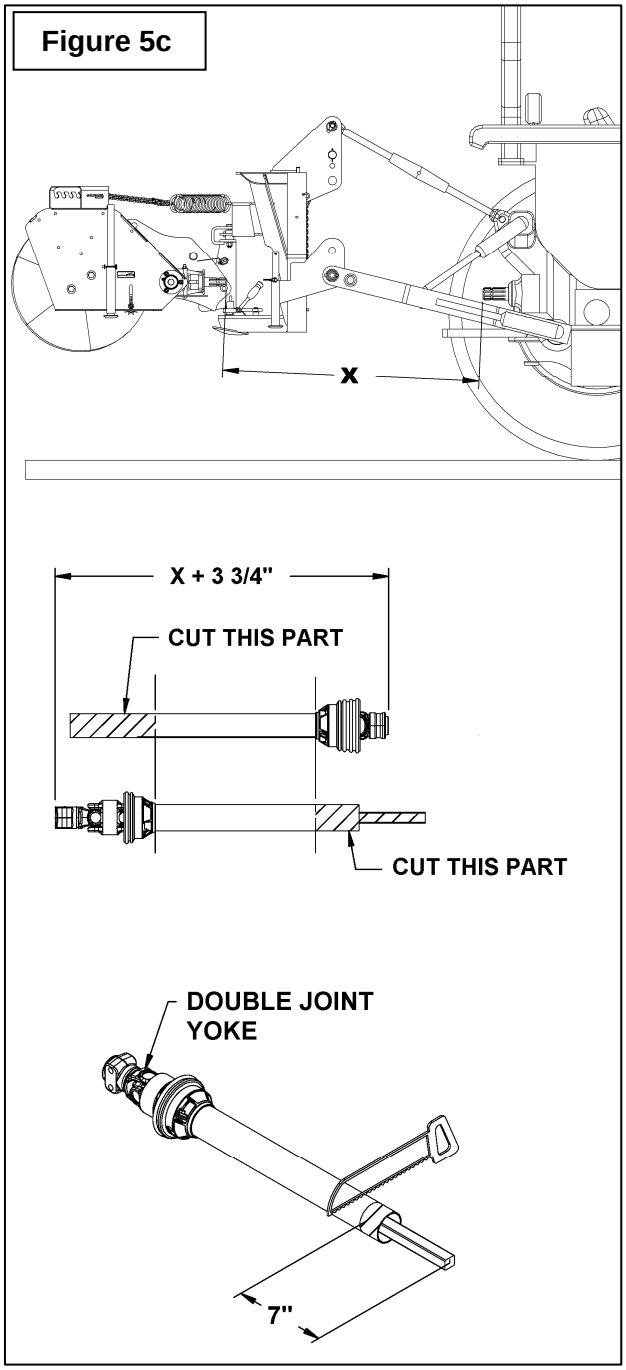

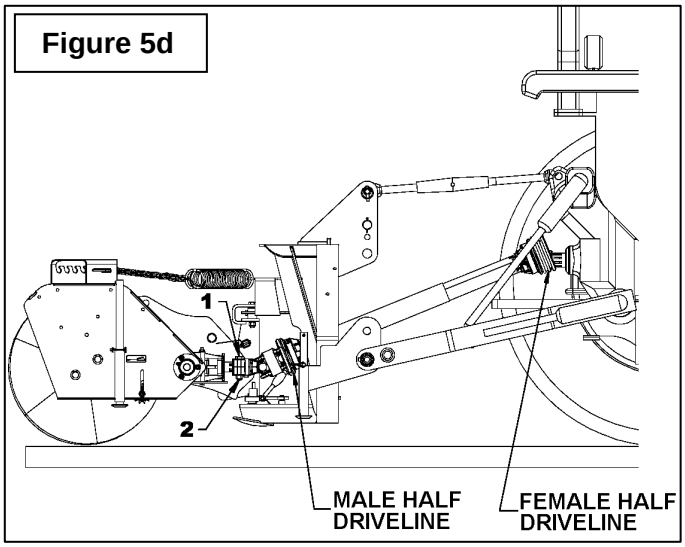

Removing the Broom from the Tractor
(Figure 6)

WARNING: To avoid serious personal injuries: Before getting off the tractor: Park the tractor on level ground, place the transmission in neutral, set the parking brake, disengage the driving system, place all levers including auxiliary control levers in neutral, shut off the engine and remove the ignition key.

1. Lower the four parking stands (item 1) and secure in place with the wire lock pins (item 2) in the position illustrated.
2. Disconnect the tractor's half driveline (item3) and let it rest on its support chain (item 4). Remove the pins from the hitch (item 5) and move the tractor forward slowly.

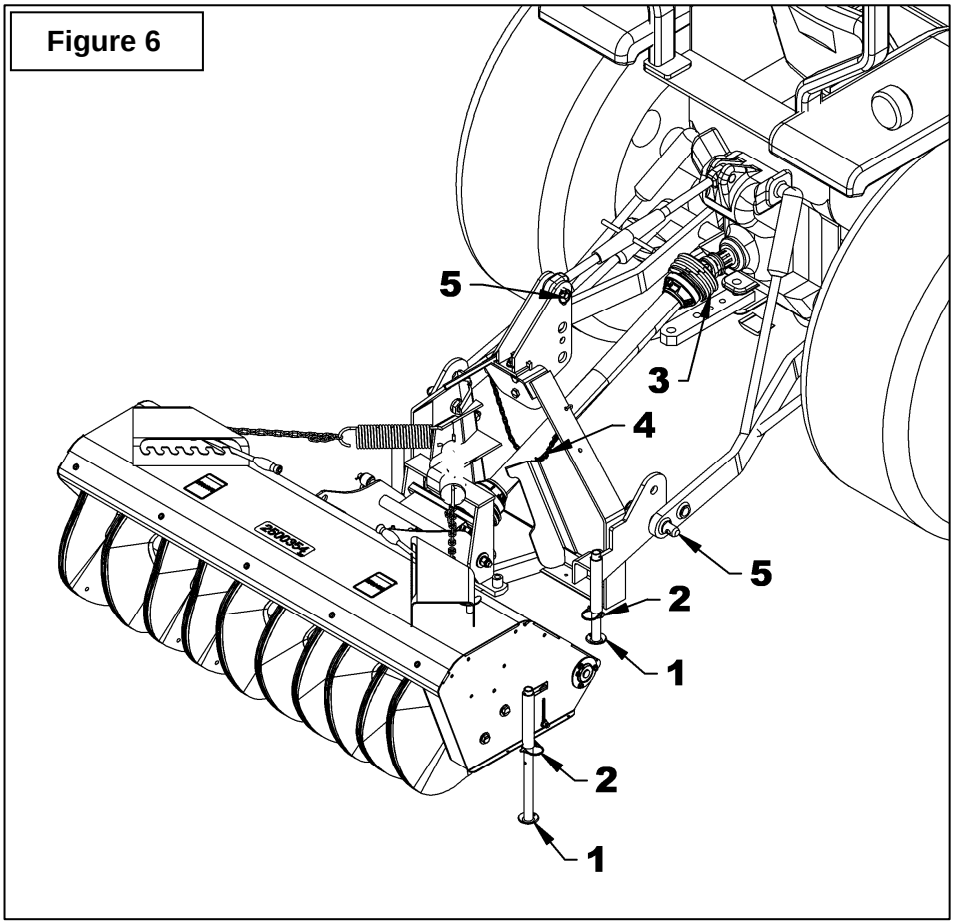

BROOM OPERATION

Preparing to Sweep

1. Read this manual carefully. Make sure to be thoroughly familiar with the controls and how to use the broom.
2. Do not allow anyone other than the operator to climb on the tractor or the broom.
3. If the tractor is not equipped with a closed cabin, wear eye protection (security glasses, facial protector, etc.).
4. Make sure that all bystanders are clear from the tractor, broom and broom discharge. The tractor, broom and any debris thrown by the broom can cause serious injuries.

WARNING: Never use the broom on carpets of any type.

Transport Mode
(Figures 7-9)

Figure 7: During travel, the broom must be placed in transport mode. To do so, move the engagement levers (item 1) towards the front in the furthest notches and raise the broom with the tractor's hydraulic lever.

IMPORTANT: Remove any accumulation of snow, ice, mud or dirt from the brush and the broom regularly; the weight of such accumulations could unbalance the broom and cause premature or uneven wear of the brushes.

Raising and Lowering the Broom

Pull the valve lever located on the right side of the seal to raise the broom and push it forward to lower the broom. Push the lever completely forward to put the broom in float position.

Manual Angling

Raise the broom slightly off the ground, lift the angling lever, select the desired angle and lower the lever completely.

Note: If you find the broom doesn't go up enough, lower the broom, take the engagement levers apart (item 1) and attach the tension springs (items 5 -6) in another link to shorten the chain. Reinstall the levers by following the instruction of steps 5 & 6 in the section ***"Adjusting the Tension Springs"***

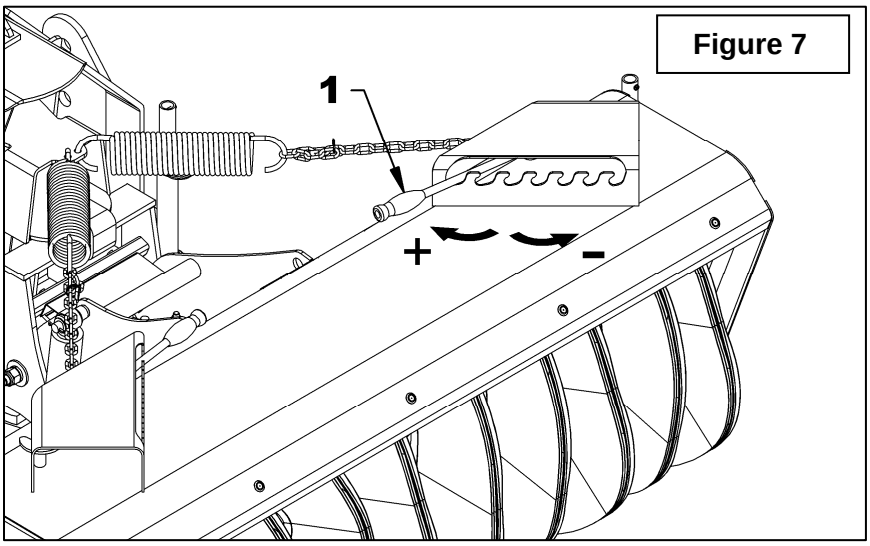

Figure 7

Ground Pressure Adjustment
(Figures 7-8)

1. Make sure the pressure of the tractor tires is properly adjusted.
2. Find a hard and dirty surface. With the brush off the ground, engage the broom, lower the brush to the ground and let it turn 5 to 10 seconds without moving. Raise the brush off the ground, disengage the broom and wait till the brush stops turning completely.
3. Move the tractor forward and turn the engine off.
4. Measure the path cleaned. If the brush is adjusted properly, the path is between 3 1/4" and 3 3/4" wide (83 and 95mm) and both sides of the path are parallel.
5. To adjust ground pressure, simply raise the engagement lever (**Fig. 7,** item 1), move it forward or backward in the notches of the tension adjustment box. To reduce ground pressure, move the engagement lever toward the front of the broom. To increase, move towards the rear of the broom. Make sure the weight is evenly distributed on both sides. An asymmetric adjustment may be necessary to counterbalance the weight of the broom and the ground pressure.

NOTE: Attach the spring in another chain link if the engagement levers (**Fig. 7,** item 1) cannot be set to obtain a proper adjustment. Shorten the chain if the path cleaned is wider than 3 3/4" and lengthen the chain if it's narrower than 3 1/4". See the section ***"Installation of the Tension Springs"*** to make this adjustment.

NOTE: Further adjustment will be necessary to compensate for brush wear.

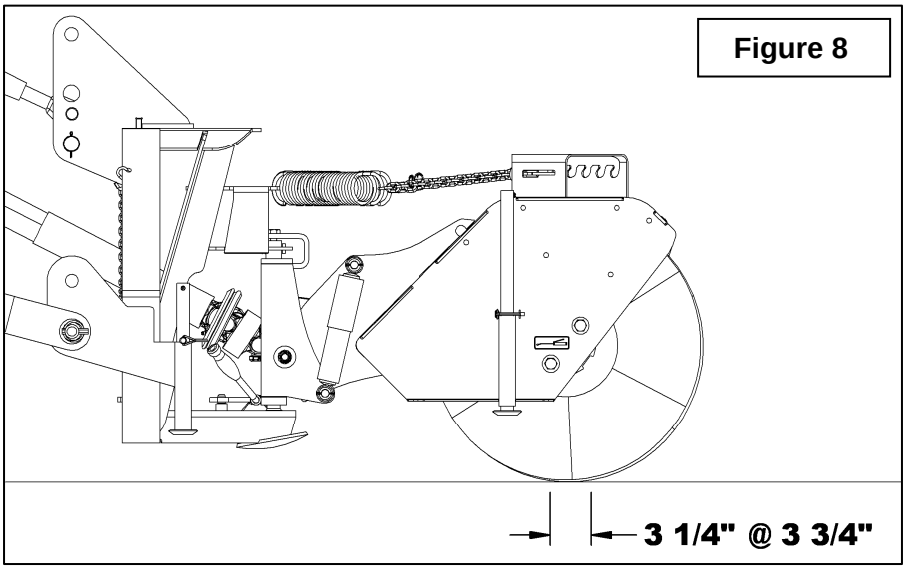

Figure 8

Adjustment of the Tension Springs
(Figures 8-8a)

NOTE : Perform the following steps only when the engagement levers (item 1) do not allow for an adequate adjustment of the ground pressure.

1. Lower the broom to the ground and move the engagement levers (item 1) towards the rear of the broom (position 2a) to reduce the spring tension as much as possible..
2. Remove the engagement levers (item 1) from the tension adjustment boxes (item 2).
3. Remove the circle cotters (item 3) and the springs (item 5) from each chain (item 4).
4. Place the springs (item 5) in another chain link. Shorten the length of the chain to reduce ground pressure of the brush or lengthen the chain to increase ground pressure.
5. Reinstall an engagement lever (item 1), handle first, in the notches of each tension adjustment box (item 2).
6. Position a lever (item 1) in the first notch of the adjustment box (item 2a). Place yourself facing the broom and put one hand on the spring hook attached to the chain and the other hand on the lever putting the index and middle fingers between the clevis. Pull on the lever and the spring hook to grip the pivot pin located inside the adjustment box (item 2). Proceed the same way for the second lever.
7. Secure the free end of each chain (item 4) to the chain with a circle cotter (item 7) as shown on **figure 9a**.

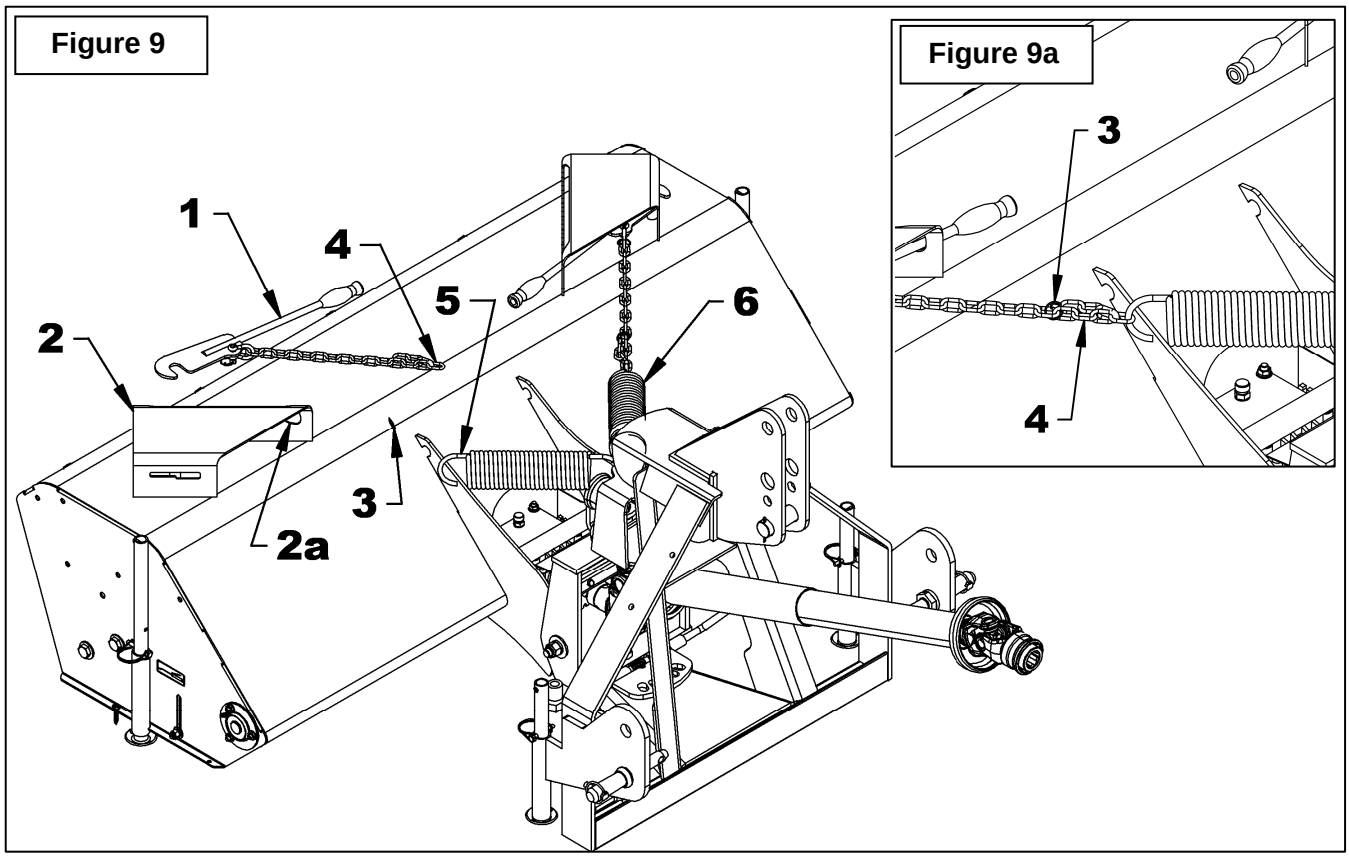

The rotary broom's suspension design keeps the ground pressure of the brush constant and within a pressure range that makes the brush sweep with the tips of the bristles for a longer brush life.

Improper downward pressure can decrease brush life up to 95%. The broom must sweep with the bristle tips. When too much down pressure is applied, the broom no longer uses the tips; the broom cleans with the sides of the bristles. This limits the flicking action of the bristles and limits its sweeping effectiveness.

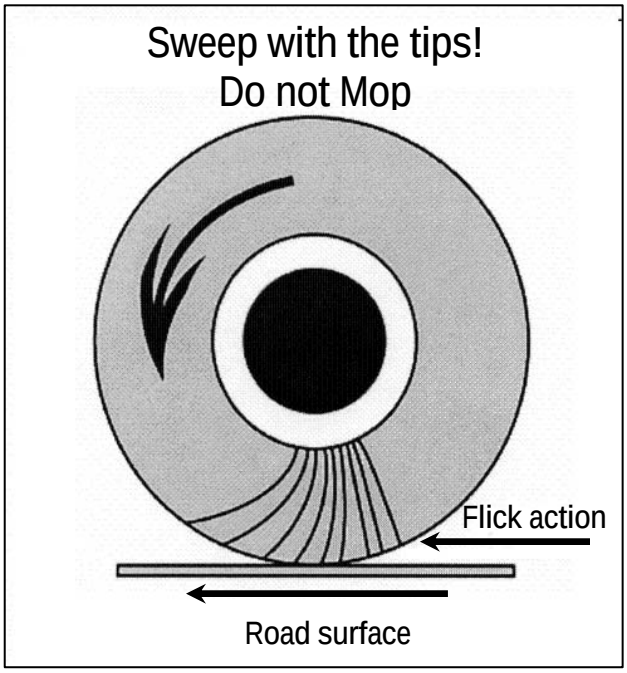

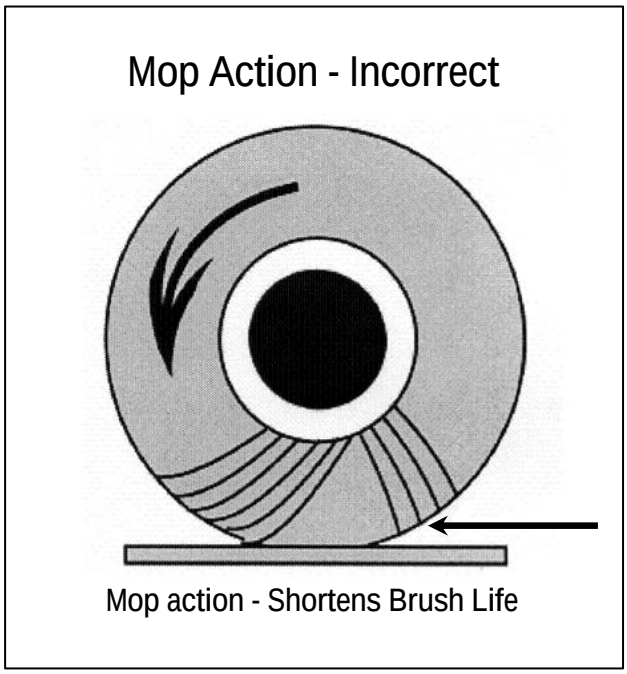

General Sweeping

1. Minimize dust by reducing brush speed and by sweeping on days with high moisture.
2. For light material, angle broom 12.5° right or left rather than fully angled to obtain a wider sweeping path.
3. For heavier material, reduce ground speed and angle the brush fully to the left or right to expel the accumulated debris from the sweeping path as quickly as possible thus preventing build up.
4. Prevent damage to the broom by removing large foreign objects.

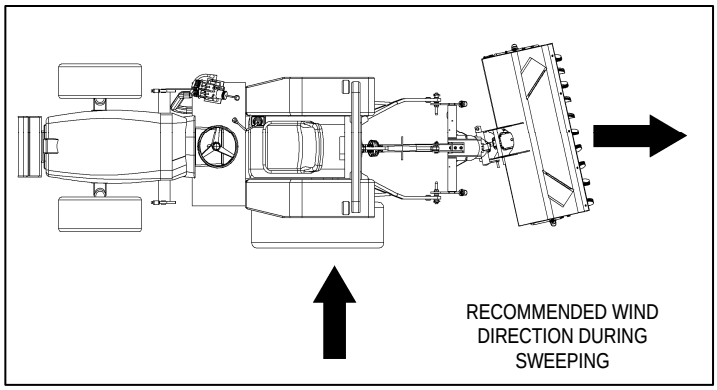

Lawn Dethatching & Leaf Raking

IMPORTANT: Optional lawn dethatching wheels must be installed to perform these tasks in order to avoid excessive ground contact.

1. Bristles should barely touch the ground for lawn dethatching and leaf raking operations.
2. To adjust the height of the wheel (1/4" at a time, from 4 1/4" minimum to 9 1/2" maximum) slide the inner tube upward or downward, as needed, and insert the square wire lock pin in the open hole.
3. We recommend adjusting the wheel height to 1" lower than the brush height to make a first try on the grass. Then raise or lower the wheels as required.
4. Slower brush speed and ground speed are more adequate for lawn dethatching. This will avoid bouncing which could damage the lawn due to excessive ground contact.
5. Minimize dust by reducing brush speed and by sweeping when moisture is high (but not wet) whenever possible..

Snow Removal

WARNING:

To avoid serious injuries: Foreign objects in snow may be thrown farther than the snow. Use the slowest brush speed that will perform the job. Stay aware of broom discharge direction.

WARNING:

To avoid serious injuries: Snow or ice build-up on the sweeper hood can cause a loss of tractor steering control. Regularly remove any snow or ice from the sweeper hood to prevent the excess weight from affecting steering.

1. This broom's optimum performance is achieved when snow depth is 3" or less.
2. To avoid the snow from being blown back on the tractor and operator, sweep with the wind blowing in the direction of broom discharge.
3. Vary the brush speed and broom angle so the brush throws material on each side to prevent excessive accumulations.
4. Brush speed must be at its maximum to obtain a better performance in wet, heavy snow or slush

TROUBLESHOOTING

Uneven Wear of the Brush

- Make sure there is no debris wrapped around the brush.
- Check the ground pressure adjustment (see page 17).
- Remove the accumulated debris under the hood.

The Brush Bounces

- The operator transmits a vibration to the accelerator (HST pedal). Solution: Use the cruise control.
- The quantity of debris being swept is too large. Solution: Reduce the width of the sweeping path and place the broom at an angle to prevent an accumulation of debris.

Note: The travel speed of the tractor and the down pressure of the brush will have little effect on this condition.

Rear Debris Being Thrown Back

- The quantity of debris being swept is too large. Solution: Reduce the width of the sweeping path and place the broom at an angle to prevent an accumulation of debris.

Note: The travel speed of the tractor and the down pressure of the brush will have little effect on this condition. It is therefore recommended keeping the same sweeping settings and to make a second pass to complete the job.

Debris Left on the Ground

- The travel speed of the tractor is too fast. Slow down.
- The ground pressure of the brush is too low. Solution: Increase pressure with the engagement levers located on the top of the broom.

Note: The higher the ground pressure of the brush is, the more the brush life is reduced.

MAINTENANCE

ALWAYS USE GENUINE PARTS WHEN REPLACEMENT PARTS ARE REQUIRED.

1. Avoid exposing broom bristles to direct sunlight for long periods to avoid damage.
2. Because of the dust raised during sweeping, the tractor air cleaner should be checked daily and replaced when necessary.

Hardware

Check and tighten all hardware, including factory-installed hardware, before operating the rotary broom and every 8 hours of operation.

Brush Replacement
(figures 10-10a-10b-10c)

Important: Replace the brushes when the diameter reaches 15".

1. Place the tractor mounted with the broom on a clean, flat and level surface. Put the transmission in neutral, apply the parking brake, raise the broom with the lifting mechanism, turn off the engine and wait for the brush to stop turning completely.
2. **Figure 10:** Remove the chain idler (item 1) from the broom housing (item 2) by removing the 3/8"NC nylon insert locknut (item 3), the 3/8" lockwasher (item 4) and the 3/8" flat washer (item 5).
3. **Figure 10a:** Place the two engagement levers (item 4) in the "A" position and, using the tractor's hydraulic lever, lower the broom so the brush touches the ground.
4. **Figure 10a:** Remove the 1/2"NC x 1 1/4"lg hex. bolts (item 1), the two flat washers (item 6) and the flange nuts (item 2) from the brush support right side bearing (item 3).
5. **Figure 10a:** Place the engagement levers (item 4) to position "B" to release the brushes from the broom housing (item 5). If the brushes aren't released sufficiently from the broom, raise the broom as needed with the subframe lift mechanism.
6. **Figure 10b:** Remove the three 5/16"NC x 1" lg. hex bolts (item 2), the three 5/16" lockwashers (item 3) and the retaining plate (item 1) from the brush support (item 5). Take off all the brushes (item 4) from the brush support (item 5).

IMPORTANT: If you decide to install half steel/half polypropylene brushes, you must start and finish with a polypropylene brush.

7. **Figure 10b:** Install each brush (item 4) in the opposite direction of the one next to it (see **Figure 10c**). The two pins on each brush (item 4a) that secure the brushes to the support must be alternated 120° (1/3 of a turn) to obtain a balanced distribution on each of the support's three square tubes (item 5a).
8. **Figure 10b:** Secure the brushes with the retaining plate (item 1), the three. 5/16"NC x 1" lg. hex bolts (item 2) and the three 5/16" lockwashers (item 3).
9. **Figure 10a:** Lower the broom housing (item 5) by moving the engagement levers (item 4) in the "A." position. If the housing is too high to align the holes of bearing (item 3) with those of the housing (item 5) , lower the housing as needed with the subframe lift mechanism.
10. **Figure 10a:** Attach the brush support bearing (item 3) with the two 1/2"NC x 1 1/4"lg hex bolts (item 1) and 1/2"NC serrated flange bolts (item 2).
11. **Figure 10:** Reinstall the chain idler (item 1) with the 3/8"NC nylon insert locknut (item 3), 3/8" lockwasher (item 4) and the 3/8" flat washer (item 5). Refer to page 24 for the proper chain adjustment.

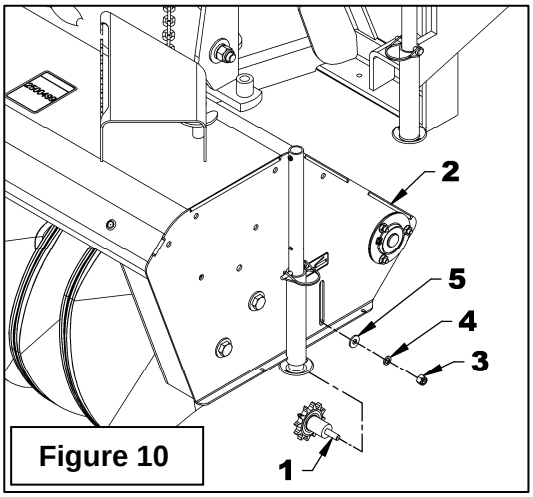

Figure 10

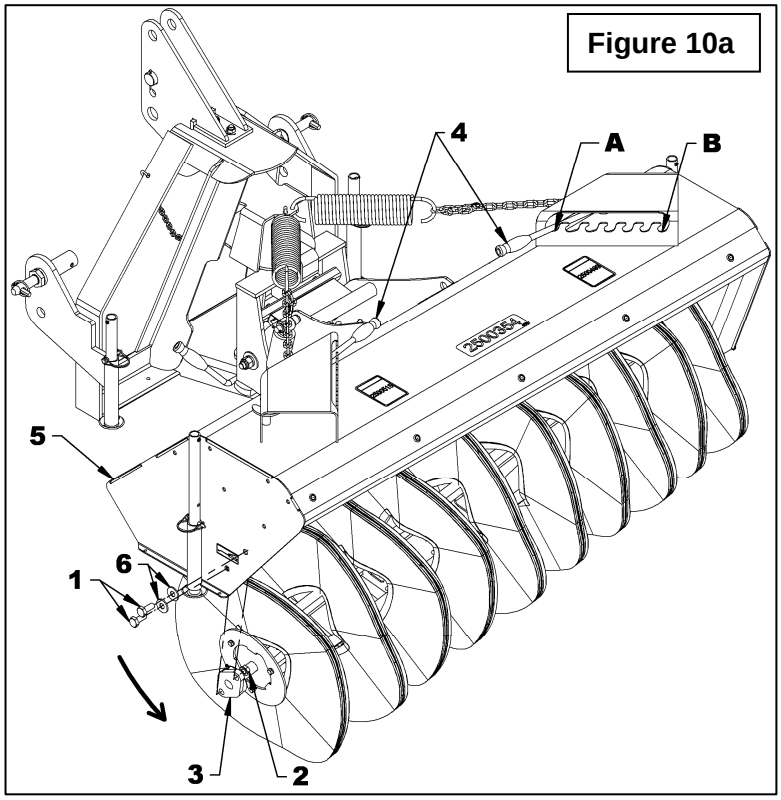

Figure 10a

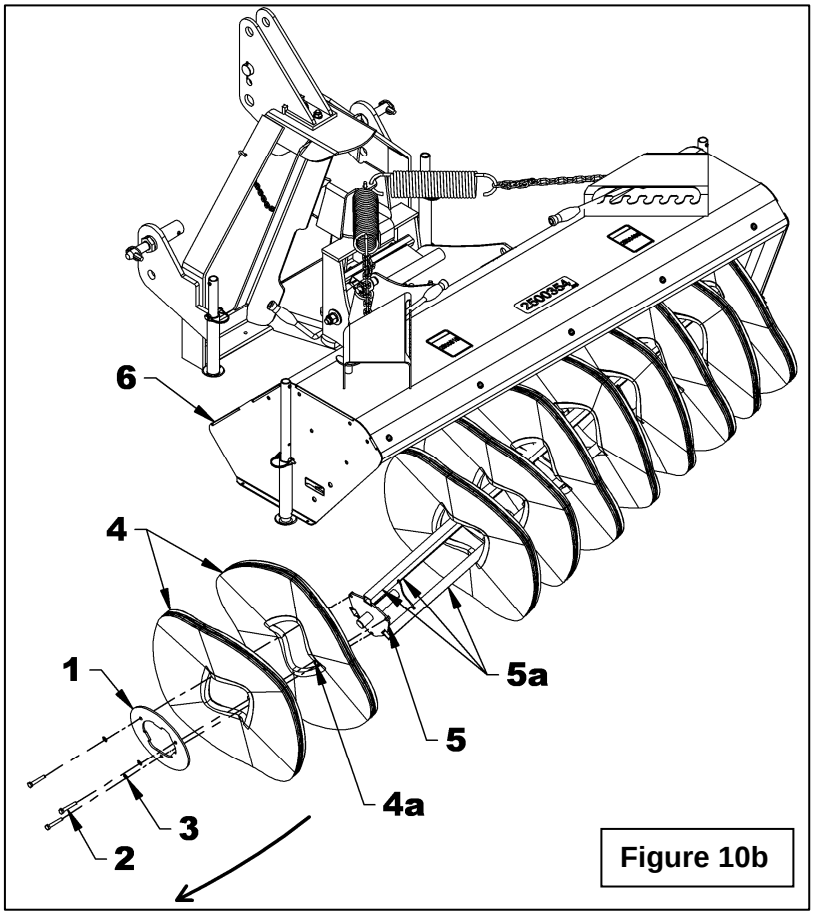

Figure 10b

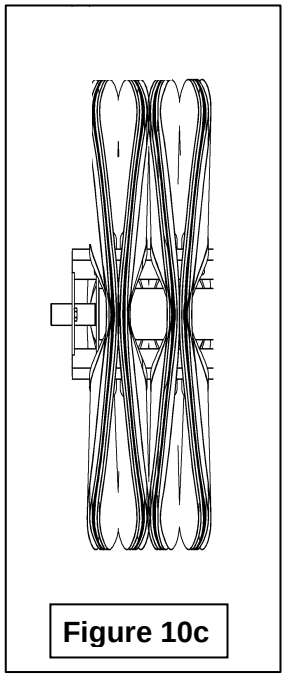

Figure 10c

Adjustment of the Drive Chain
(Figure 11)

1. Premature wear of the drive chain can be caused by too much tension. It is therefore important that the chain not be tightened to the maximum.
2. To adjust the chain tension, unscrew the 3/8"NC nylon insert locknut (item 1) and move the chain idler up with enough pressure to sufficiently tense the chain and tighten the nut (item 1). Make a mark with a pencil then unscrew the nut and lower the idler between 3/32" and 1/8" and retighten the nut (item 1).

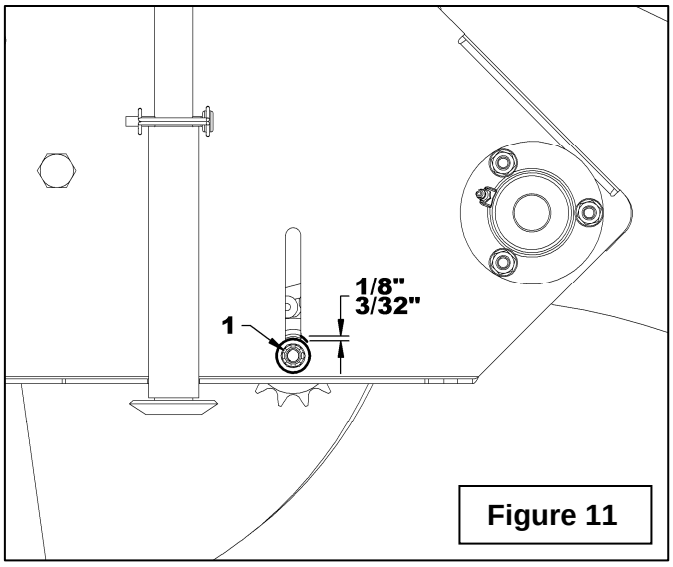

Figure 11

Gearbox Oil Level and Oil Change
(Figure 12-12a-12b)

1. Check the oil level before the first use and after every 40 hours of use. The oil level must be checked by the breather located on the top of the gearbox (item 2). Place the broom on a flat and level surface and turn it off a few minutes before checking.
2. Remove the breather (item 1), wipe the stick and reinstall the breather and remove it once more. The oil level should be between the 2 lower lines on the breather stick as shown on figure 12a
3. The oil must be changed every 100 hours of operation using SAE 80W90, AGMA 5EP oil or the equivalent.
4. To change the oil, place a container under the gearbox and remove the plug (item 3) located under the gearbox and let the oil drain completely.
5. Reinstall the plug (item 3), remove the breather (item 1) and add the new oil (approximately 425 ml)

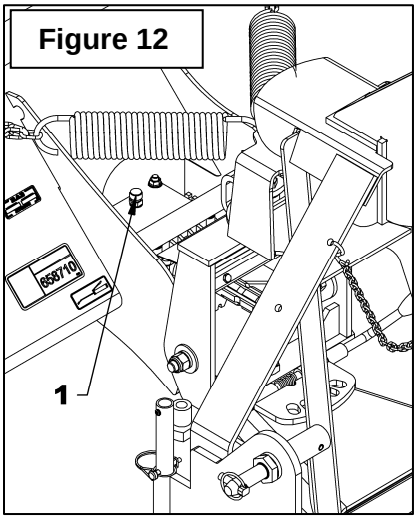

Figure 12

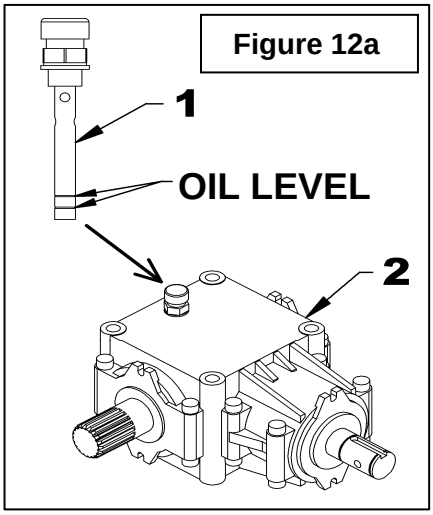

Figure 12a

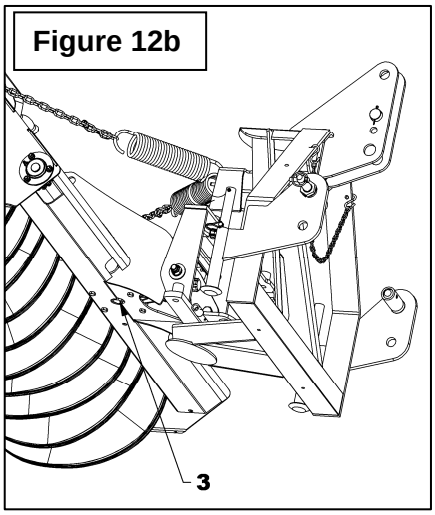

Figure 12b

LUBRICATION

NOTE: Use a good grease gun and lubricator and perform the following steps:

DESCRIPTION	TIME INTERVAL	LUBRICATION REQUIRED
Driveline	40 hours of operation	Grease each universal joint
	40 hours of operation	Separate the sliding parts and cover each one of them with grease
Drive Chain	4hours of operation	Lubricate with chain lubricant
All pivot points	40 hours of operation	Use a good quality multipurpose lubricant
Gearbox	40 hours of operation	Check oil level. If needed, add AGMA 5EP extreme pressure oil, SAE 80W90 gear oil or equivalent
	100 hours of operation	Replace oil.
Bearing	100 hours of operation	Grease each bearing

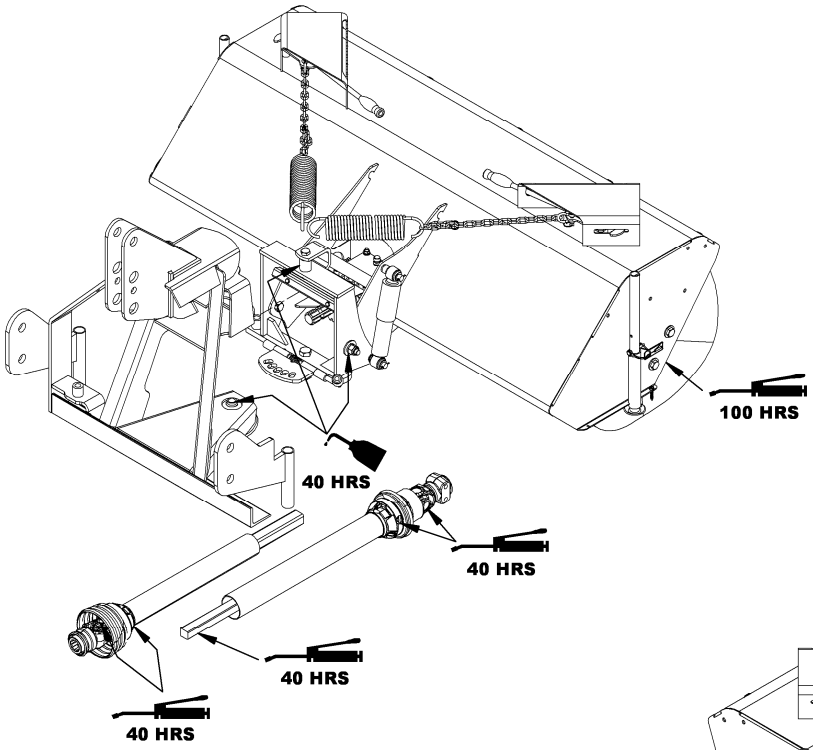

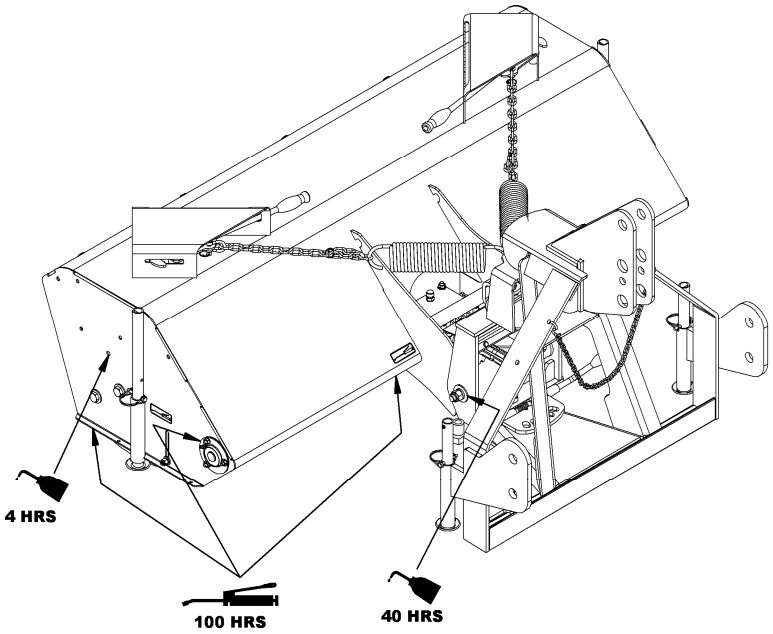

STORAGE

Before storing the subframe or rotary broom, certain precautions should be taken to protect it from deterioration.

1. Clean the subframe and rotary broom thoroughly.
2. Make all the necessary repairs.
3. Replace all safety signs that are damaged, lost, or otherwise become illegible. If a part to be replaced has a sign on it, obtain a new safety sign from your dealer and install it in the same place as on the removed part.
4. Repaint all parts from which paint has worn or peeled.
5. Lubricate the subframe and rotary broom as instructed under **"Lubrication"** section.
6. When the subframe and rotary broom are dry, oil all moving parts. Apply oil to all surfaces to protect against rust.

   NOTE: Do not allow any oil or grease on the broom bristles.
7. Store in a dry place.
8. If rotary broom has hydraulic components, install protective plugs and caps on the quick couplers.
9. Place the rotary broom on its parking stands, to avoid the bristles from touching the ground.
10. If the broom bristles are exposed to direct sunlight, cover the broom with a tarp.

INTRODUCTION

All parts are illustrated in "exploded views" which show the individual parts in their normal relationship to each other. Reference numbers are used in the illustrations. These numbers correspond to those in the "Reference Number" (REF) column, and are followed by the description and quantity required.

O/L - "Obtain Locally" in the part number column indicates common hardware that is available at your local hardware supply.

All reference to right and left, forward or rearward are from the operator's view standing behind the machine.

Orders must give the complete description, correct part number, the total amount required, the serial number, the method of shipment and the shipping address.

The manufacturer reserves the rights to change, modify, or eliminate from time to time, for technical or other reasons, certain or all data, specifications, or the product or products themselves, without any liability or obligation.

The parts listed here are available through your local dealer.

ROTARY BROOM ASSEMBLY - BR6022 & BR7222

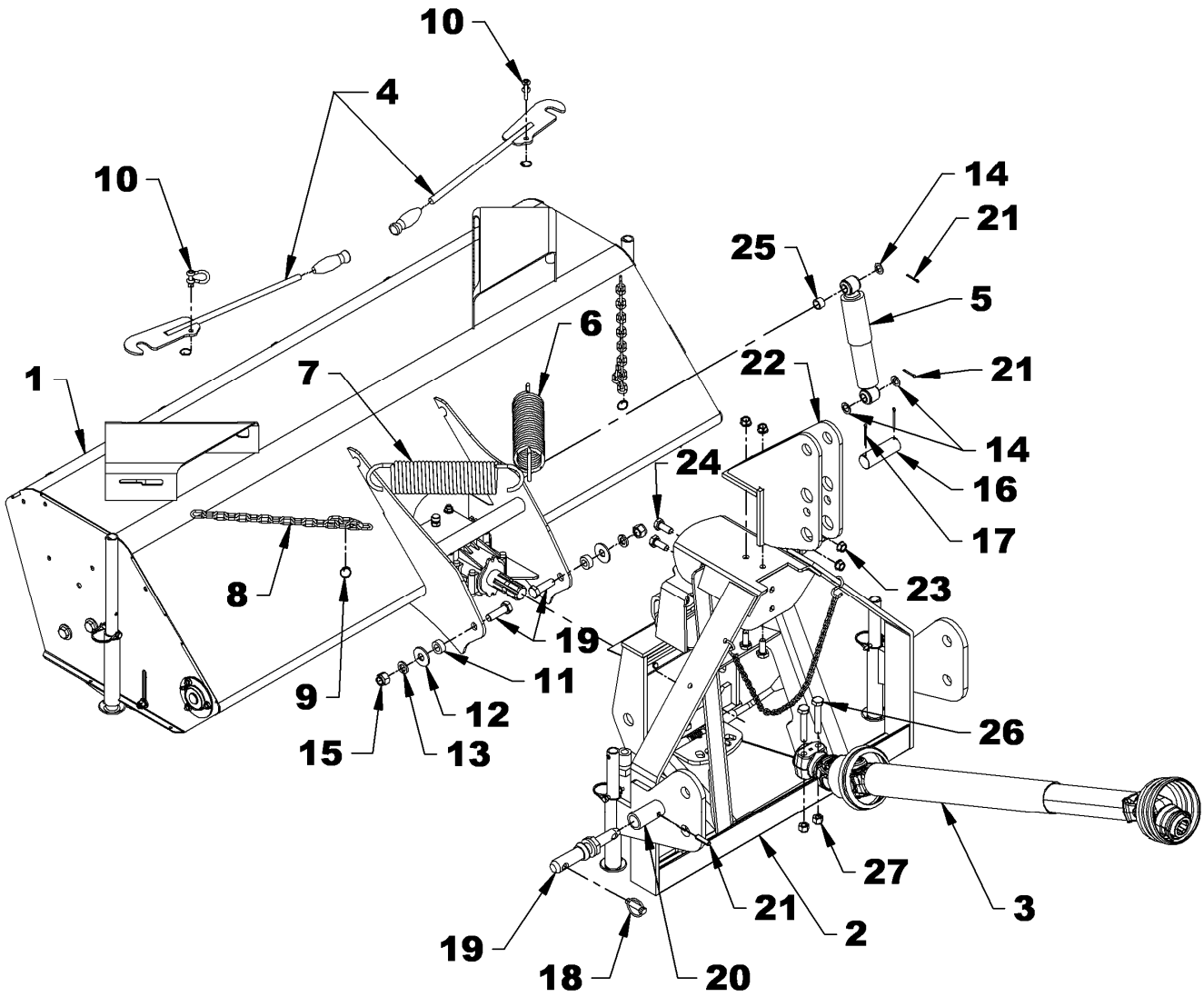

ROTARY BROOM ASSEMBLY - BR6022 & BR7222

REF.	DESCRIPTION	QTY	PART#
	Hardware bag (not illustrated)	1	668381
1	Rotary broom assembly 60" & 72"	1	-------
2	Female hitch & pivot assembly with hydraulic cylinder.	1	-------
3	Female driveline S35 x 42 1/8", 1 3/8" connection	1	4700161
4	Engagement lever	2	667153
5	Shock absorber 8 5/8" compressed x 4 1/8" stroke	1	4200019
6	Tension spring Ø0.281"	1	2200008
7	Tension spring Ø0.312"	1	2200007
8	Chain 3/16" x 15 1/4" lg	2	2300016
9	Circle cotter Ø1" x 1/16"	4	1900009
10	Clevis 1/4" x 5/16" pin PTD	2	A-10368
11	Pivot bushing	2	667172
12	Flat washer 5/8" (Ø11/16" int.), PTD	2	O/L
13	Lockwasher 5/8", PTD	2	O/L
14	Flat washer 5/8" (Ø41/64" int.), PTD	3	1400026
15	Nut nylon insert 5/8"NC, PTD	2	O/L
16	Upper pin for quick hitch	1	668378
17	Cotter pin 1/8" x 1 3/4", PTD	2	O/L
18	Lynch pin 7/16", PTD	2	1900003
19	Hitch pin Cat. 1 & 2	2	654204
20	Bushing for quick hitch	2	668379
21	Spring pin Ø3/8" x 1 1/2" lg	20	O/L
22	Upper support for 3 point hitch	1	669086
23	Nut serrated flange 1/2" NC PTD	4	O/L
24	Bolt hex. 1/2" NC x 1 1/4" gr. 5, PTD	4	O/L
25	Spacer ring	1	667732
26	Bolt hex. 1/2" NC x 3", PTD	2	O/L
27	Nut nylon insert 1/2" NC, PTD	2	O/L

ROTARY BROOM - EXPLODED VIEW – BR6022 & BR7222

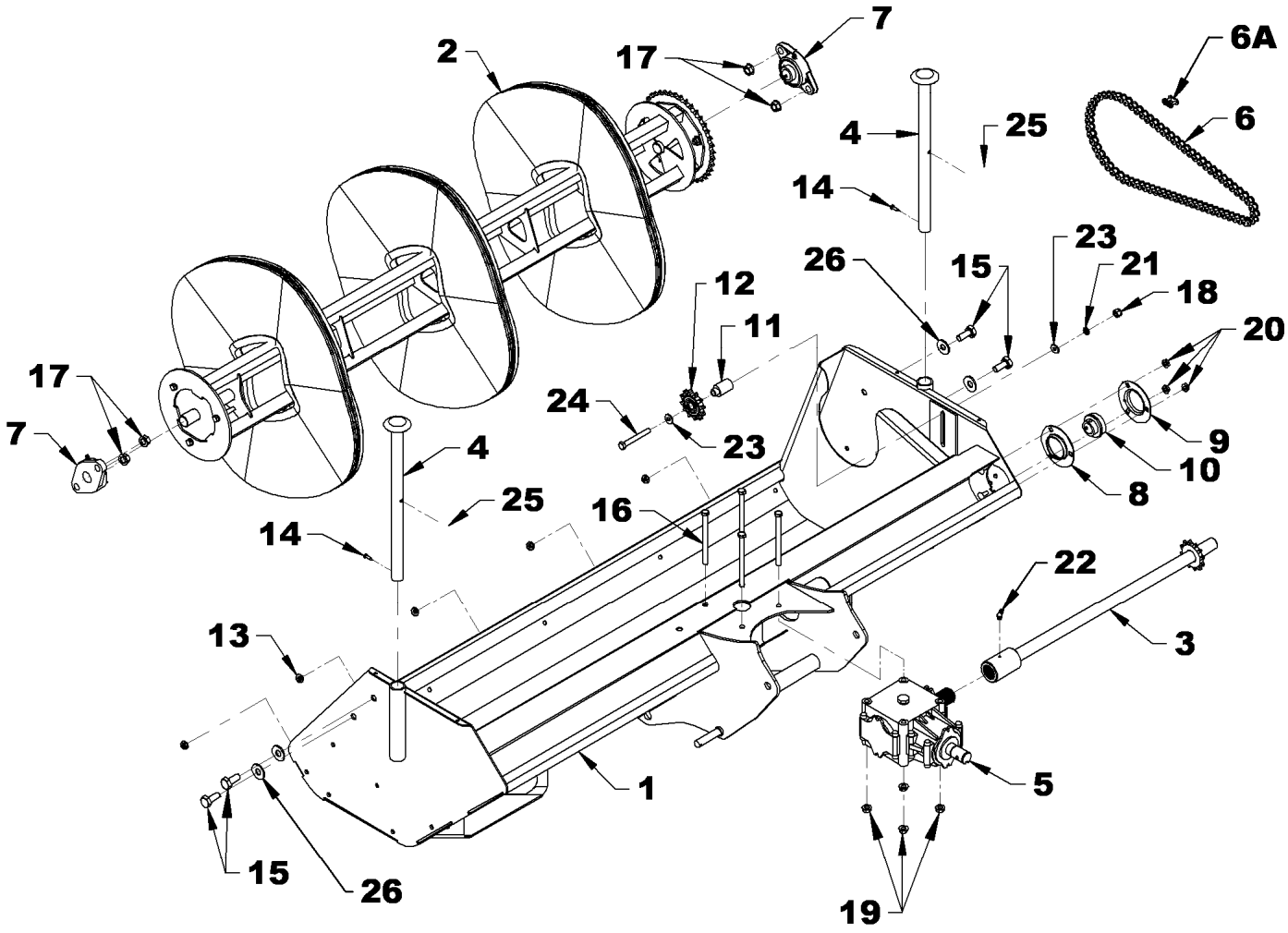

BROOM - EXPLODED VIEW – BR6022 & BR7222

REF.	DESCRIPTION	QTY	PART#
1	Broom housing – 60"	1	667806
	Broom housing – 72"	1	667727
2	Support and brush assembly	1	---------
3	Drive shaft – 60"	1	667807
	Drive shaft – 72"	1	667728
4	Parking stand	2	668373
5	Gearbox	1	4500076
6	Chain #50H x 72 links (inc. connecting link)	1	661666
7	Ball bearing Ø1"	2	4300025
8	Flange 3 bores with grease groove	1	4300030
9	Flange 3 bores with grease fitting & groove	1	4300031
10	Bearing 1" with setscrew	1	4300038
11	Idler spacer	1	667787
12	Idler sprocket H50A12	1	655426
13	Cap 3/8" for 1/16" to 1/8" thick material	5	3400009
14	Sheet metal screw 10NC pan head square socket #2 PTD	2	3200019
15	Bolt hex. 1/2"NC X 1 1/4", PTD	4	O/L
16	Bolt hex. 3/8"NC X 5", PTD	4	O/L
17	Nut serrated flange 1/2"NC, PTD	4	O/L
18	Nut nylon insert 3/8"NC, PTD	1	O/L
19	Nut serrated flange 3/8"NC, PTD	4	O/L
20	Nut serrated flange 5/16"NC, PTD	3	O/L
21	Lockwasher 3/8", PTD	1	O/L
22	Grease fitting 1/4" à 45°	1	657749
23	Flat washer 5/16" (Ø3/8" int.), PTD	2	O/L
24	Bolt hex. 3/8"NC X 3", PTD	1	O/L
25	Wire lock pinØ1/4", PTD	2	1900006
26	Flat washer 1/2" PTD	4	O/L

HITCH AND PIVOT ASSEMBLY

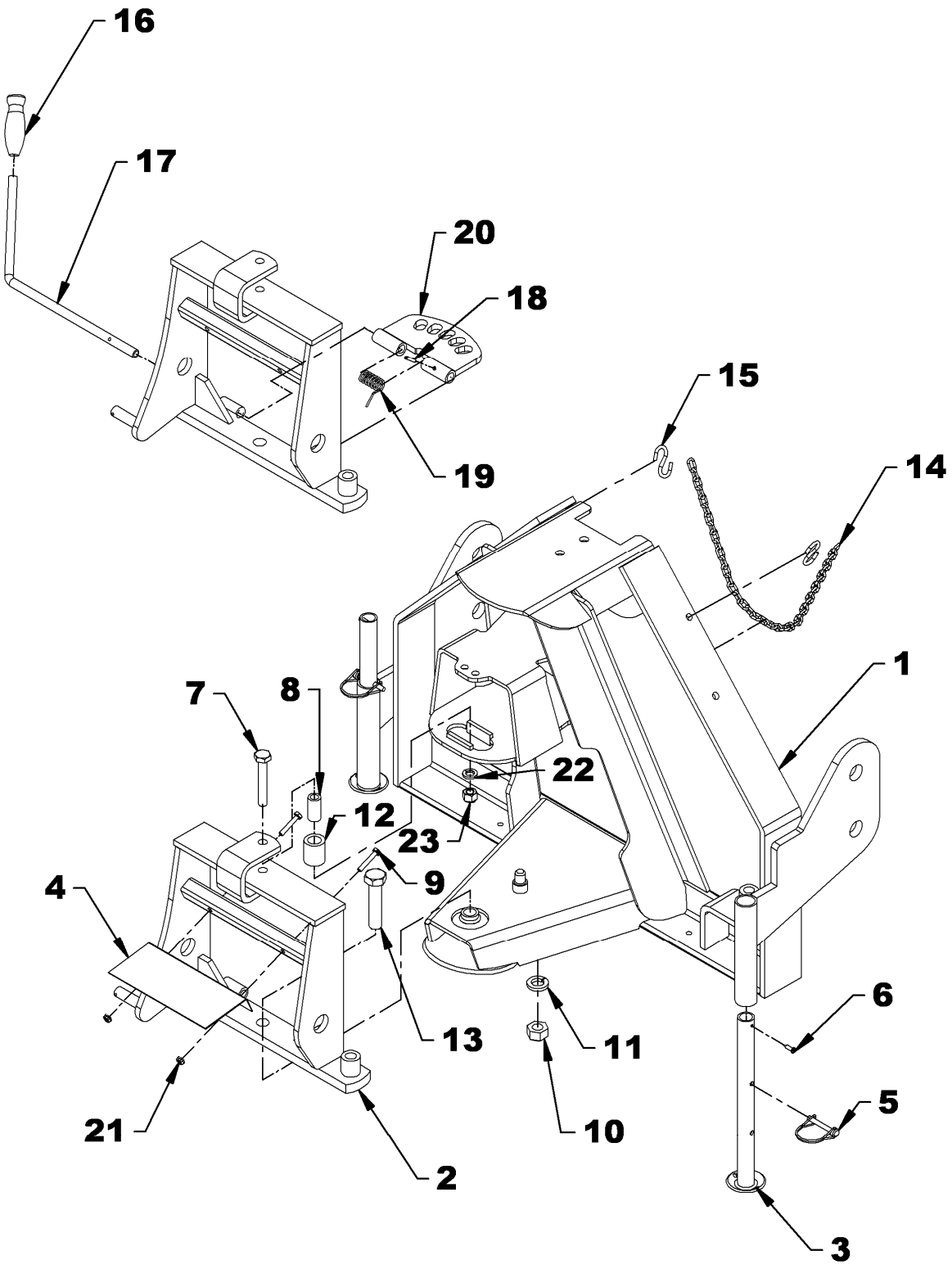

HITCH AND PIVOT ASSEMBLY

RÉF.	DESCRIPTION	QTÉ	# PIÈCE
1	3 point hitch	1	668376
2	Broom pivot	1	668047
3	Parking stand	2	668375
4	Driveline guard	1	668047
5	Round wire lockpin1/4" x 2"	2	1900006
6	Sheet metal screw square socket #2, PTD	2	3200019
7	Bolt hex. 3/4" NC x 3 1/4" gr. 5, PTD	1	O/L
8	Spacer ring	1	667174
9	Bolt 1/4" NC x 1 1/2" gr. 5, PTD	2	O/L
10	Stover nut 3/4" NC, PTD	1	1100008
11	Lockwasher 3/4", PTD	1	O/L
12	Bushing	1	667173
13	Bolt hex. 1/2" NC x 3 1/4" gr. 5, PTD	1	O/L
14	Driveline support chain	1	668377
15	Hook "S" 3/16" x 2" lg	2	2000001
16	Plastic handle Ø1/2" x 3" lg	1	656797
17	Handle	1	659651
18	Spring pin Ø3/16" x 1" lg	1	O/L
19	Torsion spring 9/16" x 1 1/2" lg	1	657989
20	Adjustment plate	1	667209
21	Nut serrated flange 1/4" NC, PTD	1	O/L
22	Lockwasher 1/2", PTD	1	O/L
23	Nut nylon insert 1/2" NC, PTD	1	O/L

SUPPORT & BRUSH ASSEMBLY

REF.	DESCRIPTION	QTY	PART#
1	Brush support - for 60" broom (incl. retaining plate & hardware)	1	669163
	- for 72" broom (incl. retaining plate & hardware)	1	669164
2	Retaining plate	1	669133
3	Sprocket 50A40, 1" hole	1	3300017
	60" Broom		
4	Brush set - 100% polypropylene 22"	27	663492
	Brush set - 50% polypropylene 50% steel 22"	27	659619
	Wafer brush - 100% polypropylene 22"	1	BR0006
	Wafer brush - 100% steel 22"	1	BR0007
	72" Broom		
	Brush set - 100% polypropylene 22"	33	663492
	Brush set - 50% polypropylene 50% steel 22"	33	659619
	Wafer brush - 100% polypropylene 22"	1	BR0004
	Wafer brush - 100% steel 22"	1	BR0005
5	Bolt hex. 3/8"NC x 1" lg. grade 5, PTD	3	O/L
6	Bolt hex. 5/16" NC x 1" lg. grade 5, PTD	3	0100019
7	Lockwasher 5/16", PTD	3	O/L
8	Nut serrated flange 3/8" NC, PTD	3	O/L

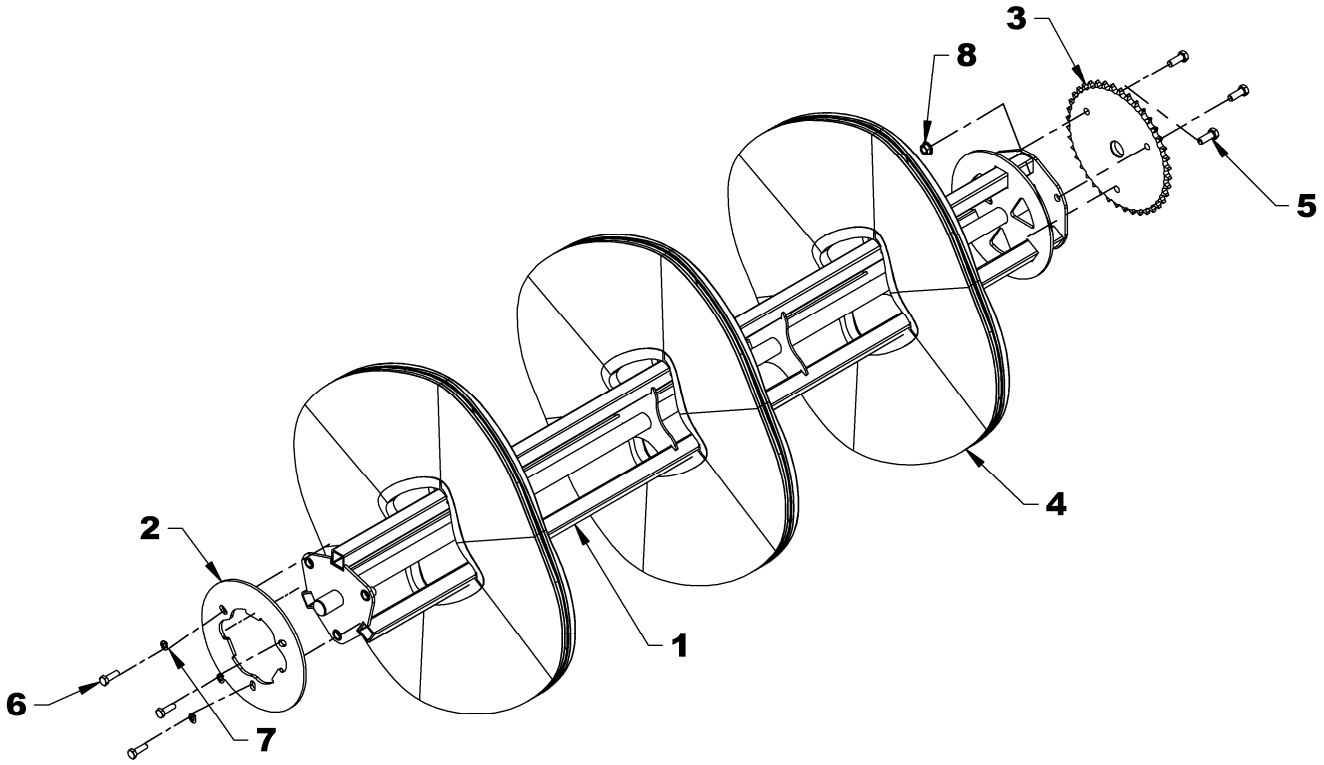

DRIVELINE - 4700162

REF.	DESCRIPTION	QTY	PART #
1	Female part 29 3/8" lg. assembled	1	4700174
2	Male part 31 5/8" lg. assembled with cv joint	1	4700173
3	Journal cross	1	4700184
4	Inner shield	1	4700181
5	Repair kit for inner shield	1	4700182
6	Outer shield	1	4700180
7	Repair kit for outer shield	1	4700179
8	Yoke and male shaft welded	1	4700178
9	Journal cross for cv joint 14R series	2	4700176
10	Middle cv joint 12R series	1	4700177
11	Yoke 1 3/8" – 6 splines	1	4700175
12	Yoke, quick disconnect		4700185
13	Tube and male shaft 29 3/8" lg		4700183
14	Repair kit for 1 3/8", 6 spline yoke (not illustrated)		4700021

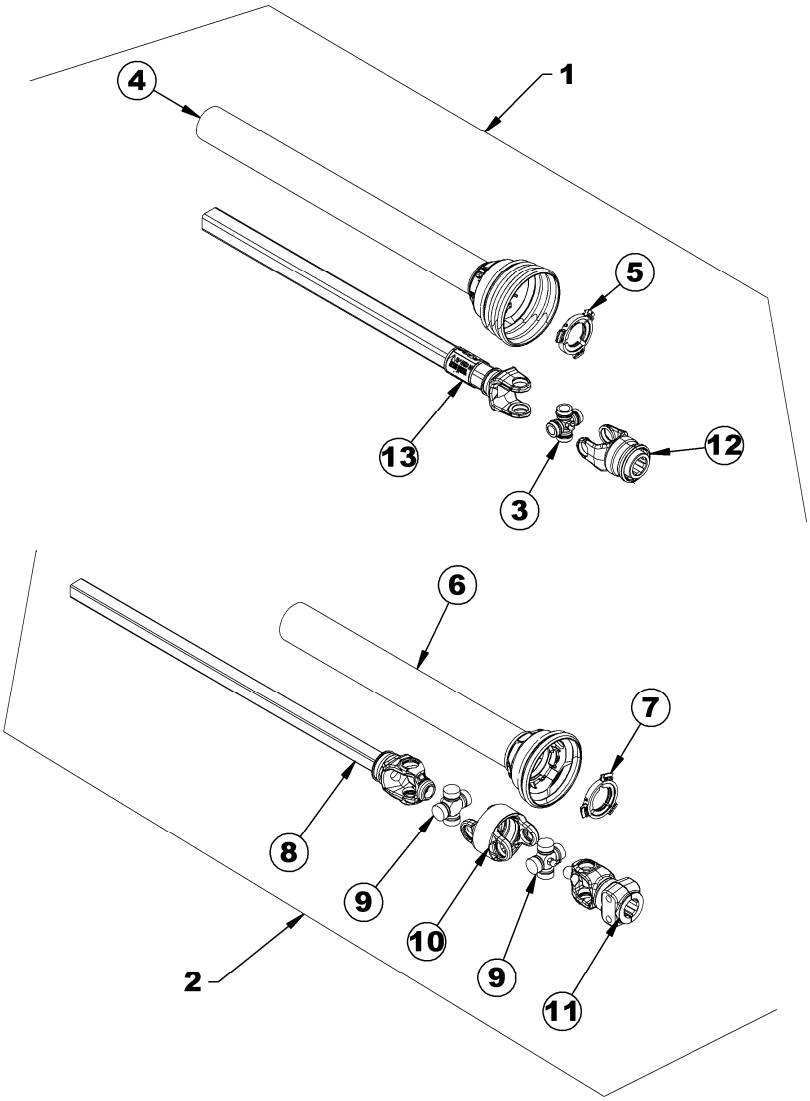

GEARBOX - 4500076

REF.	DESCRIPTION	QTY	PART #
1	Casing	1	4500121
2	Allen socket heap cap screw 8mm x 1.25mm x 55mm lg	8	0800032
3	Hex nut 8-1.25mm NC	8	0900022
4	Plug 3/8”	1	4500068
5	Plug with o-ring	1	659847
6	Oil seal	2	659852
7	Ball bearing	4	659844
8	Shim	1	656649
9	Gear	2	4500101
10	Spacer	1	4500122
11	Output shaft	1	4500103
12	Parallel key 8mm x 10mm x 25mm lg	2	4500100
13	Shim	2	659855
14	Snap ring	2	656652
15	Input shaft	1	4500102
16	Shim	1	659854
17	Oil filler plug 1/4” gas	1	661741

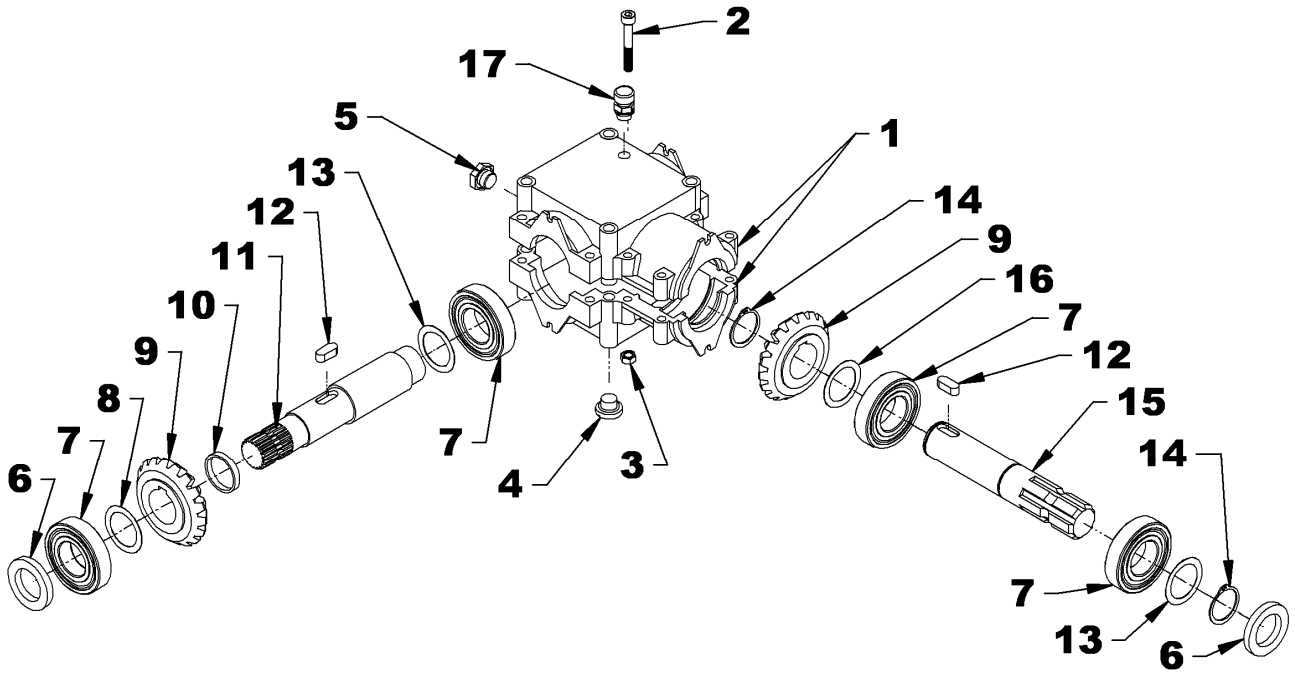

LAWN DETHATCHING WHEEL KIT

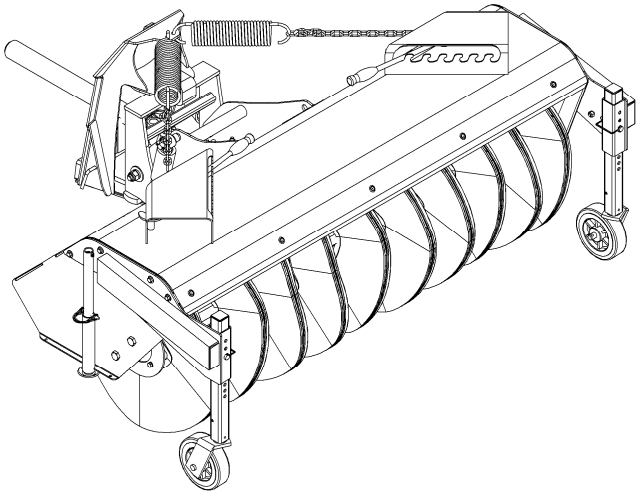

DUST DEFLECTOR

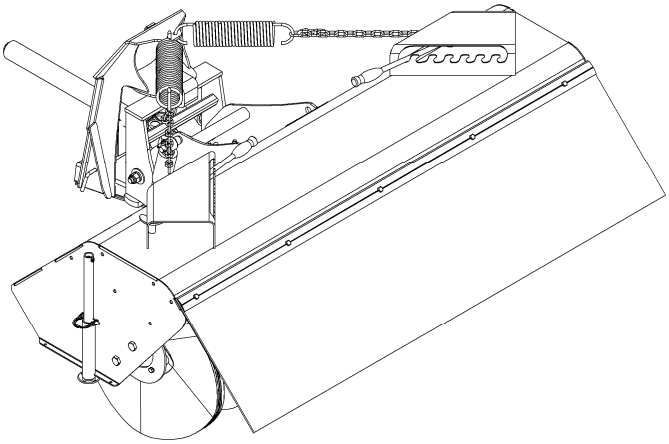

TORQUE SPECIFICATION TABLE

GENERAL SPECIFICATION TABLE Use the following torques when special torques are not given Note: These values apply to fasteners as received from supplier, when dry. These values do not apply if lubricants are used.		
BOLT SIZES (SAE)	**TORQUE**	
INCHES	**Pounds-Foot**	**Newtons-Meter**
1/4	5	7
5/16	10	14
3/8	20	27
7/16	25	41
1/2	88	119
9/16	121	144
5/8	145	224
3/4	297	403
7/8	440	597
1	638	865
1 1/8	840	1139
1 1/4	1180	1400
1 3/8	1570	2129
1 1/2	2070	2807

BOLT SIZES (METRIC)	**TORQUE**	
MILLIMETERS	**Pounds-Foot**	**Newtons-Meter**
M6	10	13
M8	22	30
M10	40	54
M12	59	80
M14	93	126
M14	130	176
M18	148	228
M20	205	278

Manufactured by:

RADTECH
2835, Chemin de l'Aéroport
Thetford Mines, Québec, Canada, G6G 5R7
Tel.: (418) 338-4499 - Fax: (418) 338-6090
e-mail : radtech@radinter.com
Internet : www.radinter.com

Printed in Canada